SIEMENS

# VIDEORECORDER FM619 Q4
# FM619 K4

S-VHS HQ VPS *digital* Hi-Fi-Stereo

## Schaltpläne + Platinen
## Block diagram
## Circuit diagram
## Printed circuit boards

Ausgabe 8914
Issue

Änderung vorbehalten
Subject to modification

Ident-Nr.: 53 5310

**Inhaltsverzeichnis**
**Table of contents**

# FM619 Q4/FM619 K4

**Seite**
**Page**


| | | |
|---|---|---|
| Blockschaltplan / Overall wiring diagram<br>RM-1 | IR-Geberplatte / IR Remite control | **A** |
| Video Block Diagram | | **B** |
| Audio Block Diagram | | **C** |
| Digital Memory Block Diagram<br>MC-2 | Adapter (Mechanism CONNECTION) | **D** |
| Ablaufsteuerung und Servo Blockschaltplan / System control & Servo Basic block diagram<br>RF Modulator / RF Converter | | **E** |
| PW-1<br>PW-2 | Netzteil / Power supply | **F** |
| CP-2<br>TM-5<br>TM-6<br>TM-7 | Video (1)<br>Switch and Audio input P.C.B.<br>Kopfhörerbuchsenplatte / H.P. Jack P.C.B.<br>S.-Buchsenplatte (INPUT) / S.-INPUT P.C.B. | **F – G** |
| VD-1 | Video (2) | **H – I** |
| VP-1<br>VD-3 | Video-Vorverstärker / Video PRE-AMP.<br>Platine für rotierenden Löschkopf / Flying ERASE P.C.B. | **I** |
| SY-2<br>TB-2 | Autom. Spurnachführung, Restspielzeitkontrolle / Auto tracking, tape remain<br>S-Buchsenplatte (OUTPUT) / S-Output TERMINAL | **J** |
| CP-A<br>TB-1 | System Control (FM619 Q4)<br>Terminal | **J + K** |
| CP-A<br>CP-A | IC 305 HIC Diagram<br>IC 351 (LC 7418) Digital SERVO IC. INTER Block Diagram | **K** |
| CP-A<br>TB-1<br>CP-A<br>CP-A | System Control (FM619 K4)<br>Terminal<br>IC 305 HIC Diagram<br>IC 351 (LC 7418) Digital Servo IC. INTER Block Diagram | **L** |
| AD-1, 2<br>VP-1 (AP-A) | Audio Leiterplatten / Audio P.C.B.<br>Audio-Vorverstärker & VP-1 P.C.B. | **M** |
| TM-1<br>TM-2, TB-3<br>Tm-3, 4 | Bedienteil, Anzeige, Timer / Tuning control, Timer, Display (FM619 Q4)<br>Mic. AMP & Mic. Jack P.C.B. (FM619 Q4)<br>VPS, TV Remote control, Back ground for Channel Scan. (FM619 Q4/K4) | **N** |
| TM-1<br>TM-2, TB-3<br>TN-5 | Bedienteil, Anzeige, Timer / Tuning control, Timer Display (FM619 K4)<br>Mic. AMP & Mic. Jack P.C.B. (FM619 K4)<br>NICAM Decoder (F619 K4) | **O** |
| DM-1<br>DM-3 | Analog Process for Digital Memory Circuit<br>Digital Memory Circuit | **P + Q** |
| DM-4 | Digital Memory Control | **Q** |
| TN-1<br>TN-3<br>TN-4 | ZF / IF<br>Audio Stereo Decoder<br>PLL | **R** |


**Zur Beachtung!**

Alle Bauteile, die in den Listen mit dem Symbol „⚠" gekennzeichnet sind, haben für die elektrische Sicherheit des Gerätes eine besondere Bedeutung.
Verwenden Sie beim Austausch dieser Teile immer das Original-Ersatzteil laut Ersatzteilliste.
Technische Daten dieser Teile müssen unbedingt eingehalten werden!

**Product safety notice**

Product safety should be considered when a component replacement is made in any area of a unit. Components indicated by the symbol ⚠ in this schematic diagram show components whose value have special significance to product safety. It is particularly recommended that only parts specified on the attached parts list be used for component replacement designated by the symbol.

**SIEMENS**

BLOCKSCHALTPLAN – VERDRAHTUNGSPLAN

OVER ALL WIRING DIAGRAM

SCHEMA A BLOCCHI – SCHEMA DI CABLAGGIO

SYNOPTIQUE – SCHEMA DE CABLAGE

PLANO DE CONEXIONES

BLOCKSCHEMA – BEDRADINGSSCHEMA

SIEMENS-ELECTROGERÄTE GMBH

1AC6P22A00500
DP2FH/G-SE, EXSE(0936YU01A)

# FM 608 Q4/K4

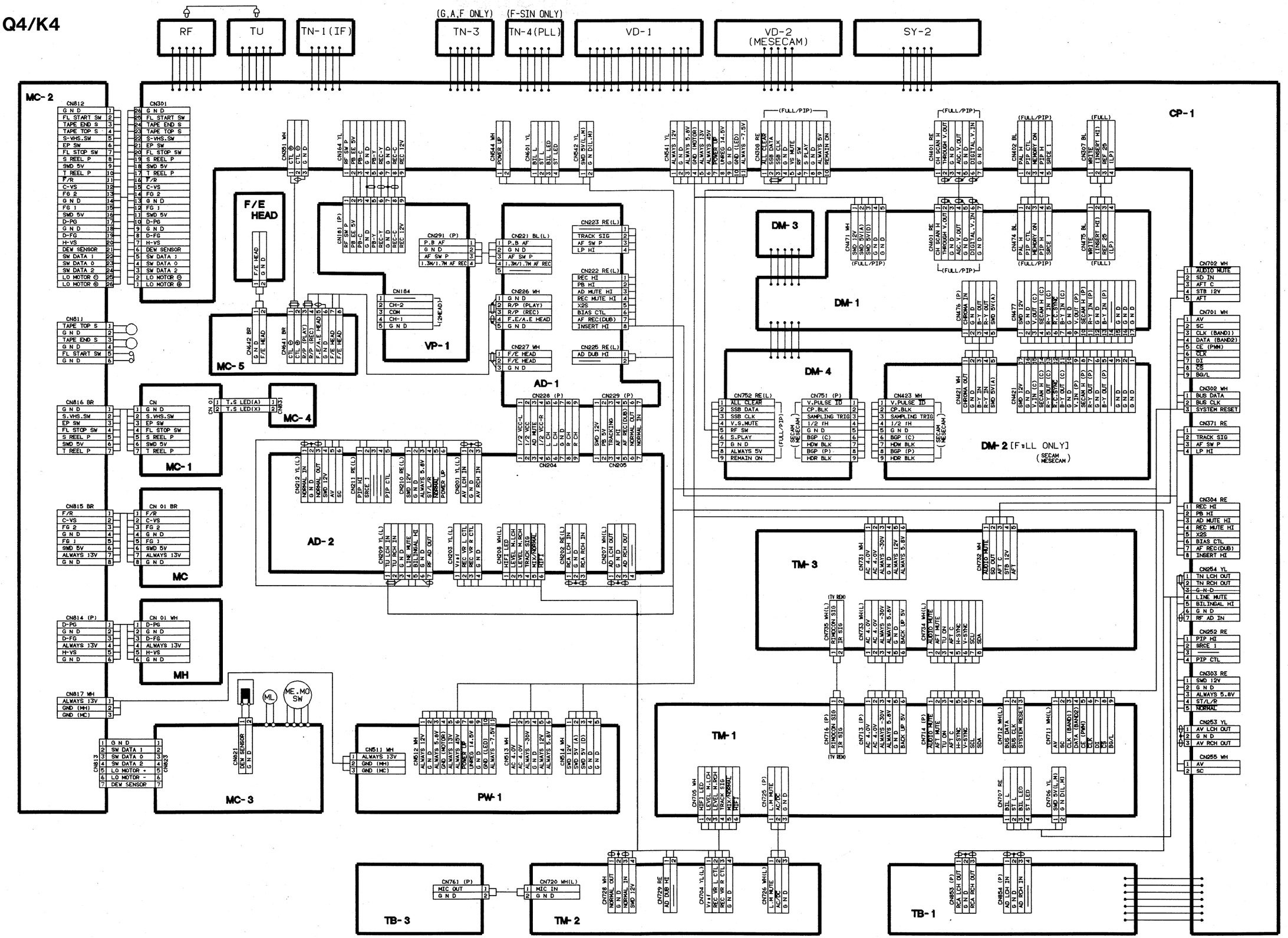
RF
TU
TN-1(IF)
(G,A,F ONLY)
TN-3
(F-SIN ONLY)
TN-4(PLL)
VD-1
VD-2 (MESECAM)
SY-2
MC-2
CP-1
F/E HEAD
VP-1
MC-5
MC-4
MC-1
AD-1
AD-2
DM-3
DM-1
DM-4
DM-2 [FULL ONLY] (SECAM MESECAM)
TM-3
TM-1
TM-2
MC
MH
MC-3
PW-1
TB-3
TB-1
ME.MO SW
ML

# OVERALL WIRING DIAGRAM

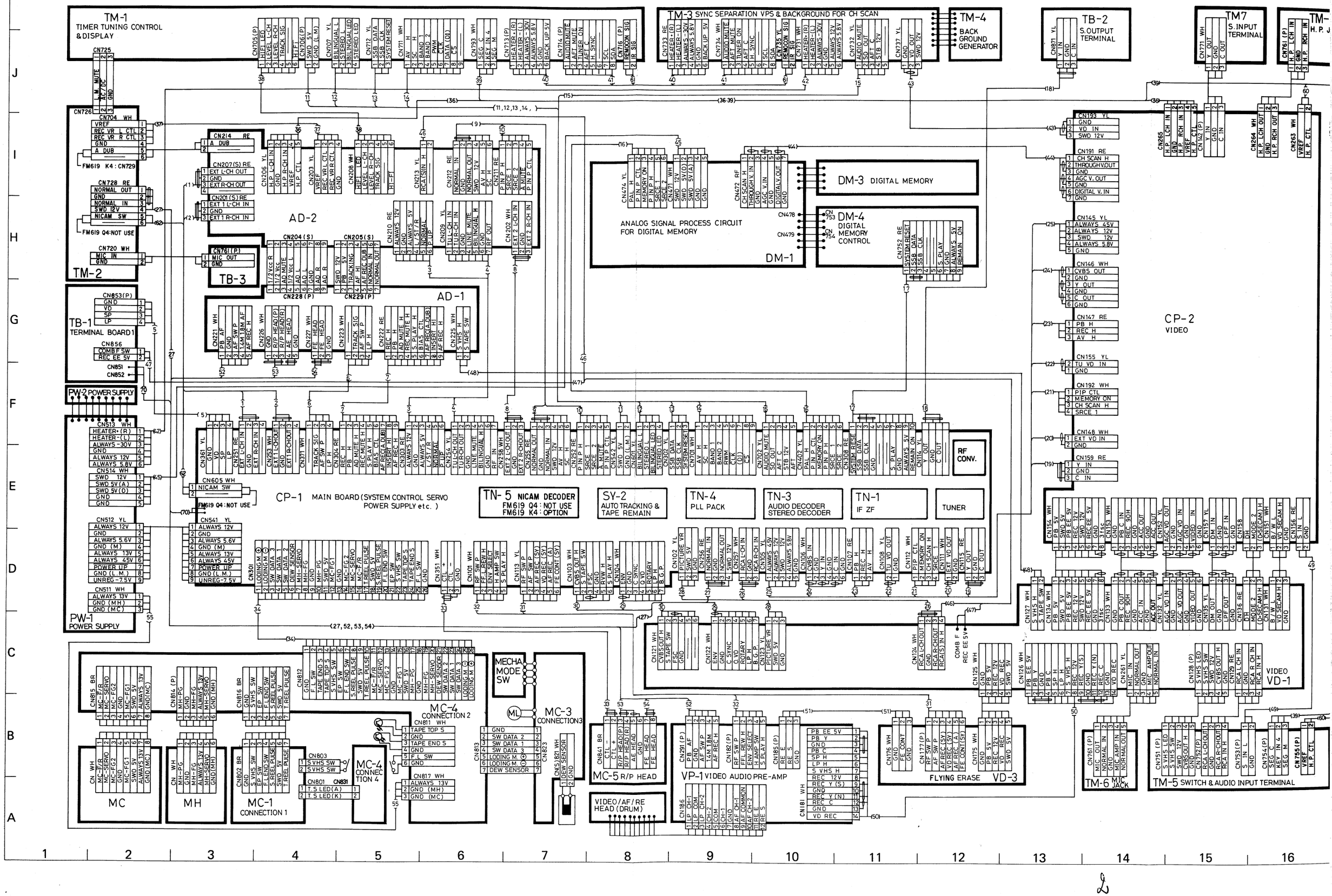

## IR-Geberplatte
## IR REMOTE CONTROL

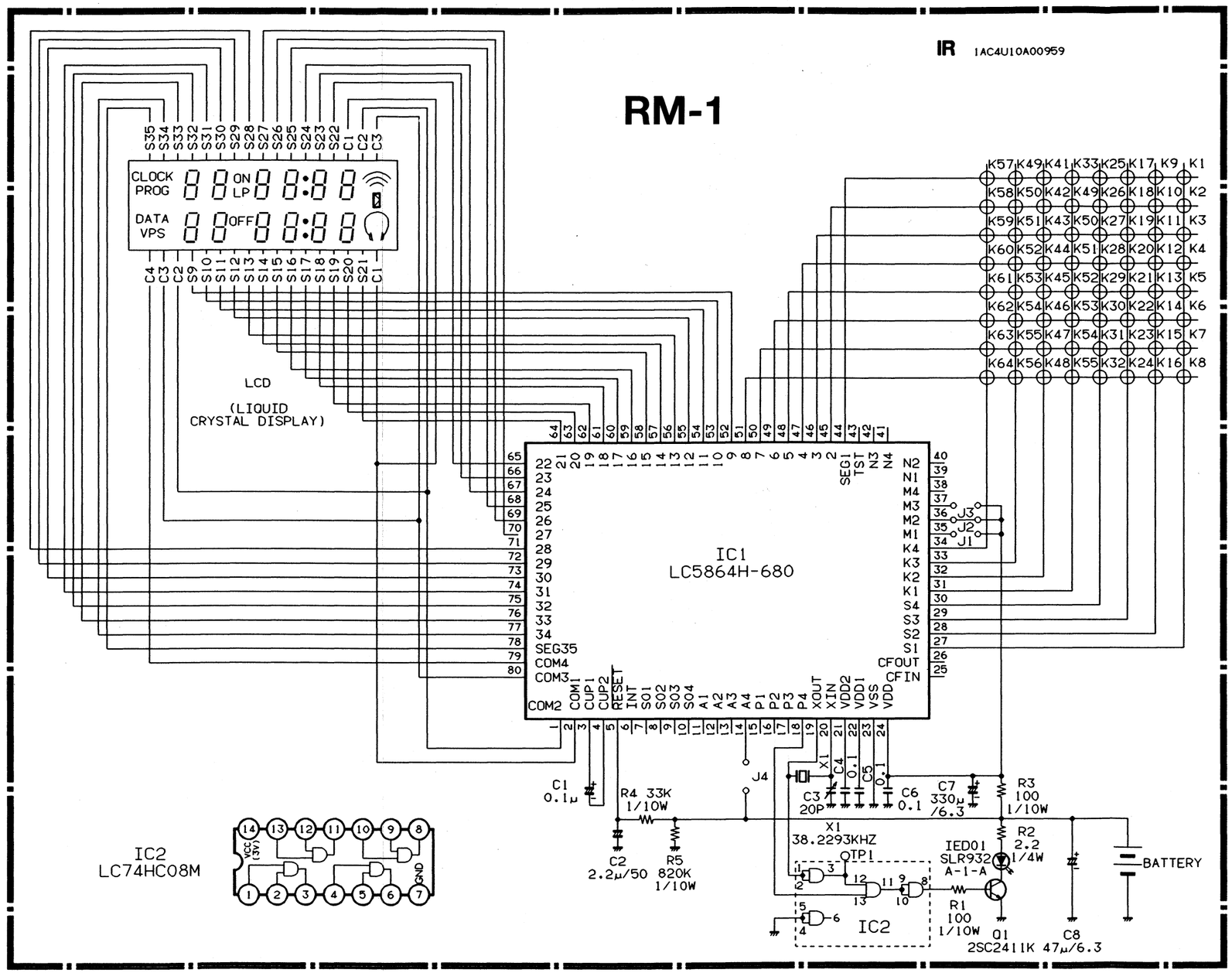


| KEY NO. | NORMAL | SHIFT |
|---|---|---|
| K1 | ▶ SLOW | QUICK |
| K2 | ■/⏻ STOP,ON/STAND BY | —— |
| K3 | MEMORY | RECALL |
| K4 | + SLOW SPEED | —— |
| K5 | - SLOW SPEED | —— |
| K6 | TV SCAN | —— |
| K8 | RELEASE | —— |
| K9 | ▶▶ FF | —— |
| K10 | ▶ PLAY | —— |
| K11 | COLOUR SATURATION + | —— |
| K12 | ◀◀ REW | ◀◀-▶▶ AUTO PLAY |
| K13 | ▮▮ PAUSE/STILL | —— |
| K14 | ⏻ TV ON/OFF | —— |
| K15 | COLOUR SATURATION - | —— |
| K16 | VOLUME - | —— |
| K17 | MARK | —— |
| K18 | ● A.DUB | —— |
| K19 | ● INSERT | —— |
| K20 K21 | ● REC | —— |
| K23 | PIP | —— |
| K24 | VOLUME + | —— |
| K25 | MEM/REP | —— |
| K26 | RESET | —— |
| K27 | → CH UP | 20 (TV) |
| K28 | ← CH DOWN | 10 (TV) |
| K29 | 0 | 0/AV (TV) |
| K33 | C.DISP | —— |
| K34 | CH/AV | —— |
| K35 | 9 | 9 (TV) |
| K36 | 8 | 8 (TV) |
| K37 | 7 | 7 (TV) |
| K41 | AUTO TRACKING | —— |
| K42 | VPS | —— |
| K43 | 6 | 6 (TV) |
| K44 | 5 | 5 (TV) |
| K45 | 4 | 4 (TV) |
| K49 | SP/LP | AUDIO |
| K50 | RECALL | |
| K51 | 3 | 3 (TV) |
| K52 | 2 | 2 (TV) |
| K53 | 1 | 1 (TV) |
| K57 | TRANS | —— |
| K58 | PROG | CLOCK |
| K59 | SEARCH | —— |
| K60 | SPECIAL | —— |
| K61 | SHIFT | |



**A**
FM619 Q4
FM619 K4

# VIDEO BLOCK DIAGRAM

**B**
**FM619 Q4**
**FM619 K4**

VP-1 BOARD

ROTARY HEAD DRUM

IC181 VIDEO HEAD AMP

VIDEO HEAD RECORDING AMP

CN184 Pin2 REC CURRENT CHECK

IC108 SUB Y-PROCESS

IC101 MAIN Y-PROCESS

IC110 VHS/S-VHS DISCRIMINATION

IC124 HD GEN

IC125 PILOT BURST GATE PULSE GEN

IC142 AGC VIDEO INPUT SELECT

IC192 THROUGH VIDEO INPUT SELECT(DM)

TM-4 and TM-3 BOARD

BACK GROUND SIGNAL GENERATOR for CH-SCAN (IC741, Q7312)

DM-1,3,4 DIGITAL MEMORY CIRCUIT BLOCK

IC121 REC/PB

IC122 PILOT BURST INSERT

IC123 ACC

IC127 CHROMA PROCESS

IC144 CHROMA INPUT SELECT

IC121 PB PILOT BURST-CLEANING

IC147 CNR

IC198 PAL/SECAM DISCRIMINATION

Y SEP

CHROMA SEP or C NC

PB CHROMA NOISE REDUCTION (CNR)

Y-SIGNAL OUTPUT
ⓐ SECAM TU-EXT picture and Digital picture.
ⓑ PAL TU-EXT picture and playback picture (except for digital).
ⓒ S-INPUT picture and black-white signal of EXT-TU picture.

Q1502,Q1503 x3fsc OSC CIRCUIT → 3fsc OUTPUT (TO IC103 and IC109)

COMB-FILTER SW (TB-1 BOARD)

Q1390 Base

X1201 Pin5

X1201 Pin3

IC111 Pin5

Q1093 Emitter

IC127 Pin30

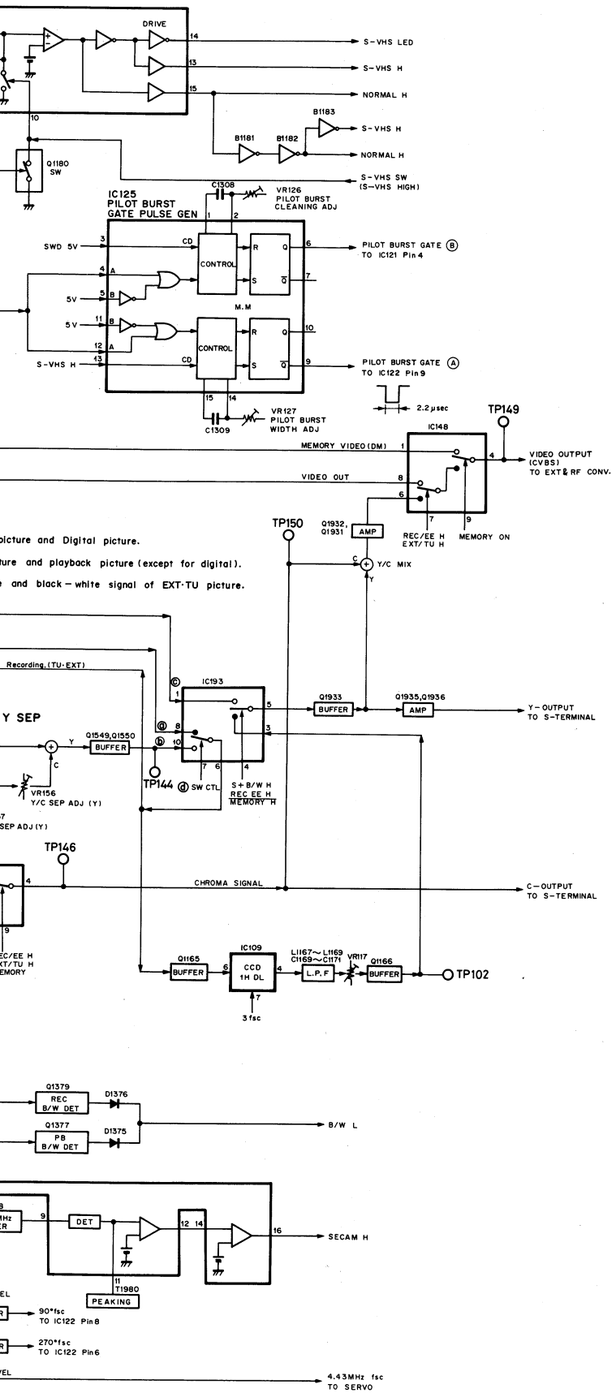


## VIDEO

**TP149** E-E-mode
(VR111 AGC Adj.)

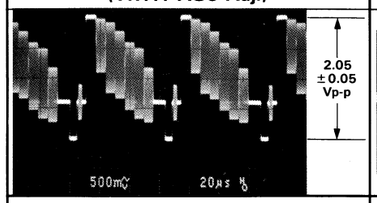


**TP104 + TP105 (INV)** PB mode
(VR108 NC Adj.)

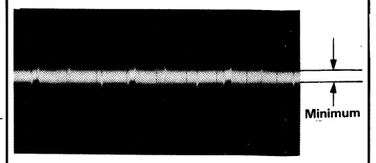


**TP130** S·VHS, E-E mode
(VR123 Pilot Burst Level Adj.)

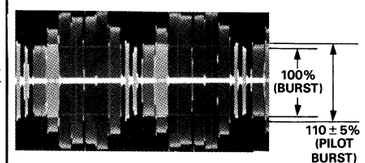


**TP111** S·VHS REC mode
(5.4MHz ~7MHz FM)

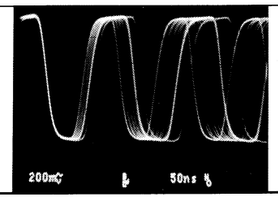


**X1201 Pin 5** PB mode
(PB Chroma Input)

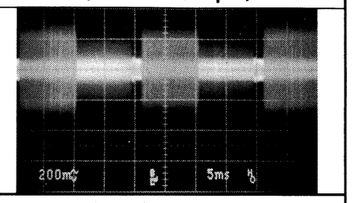


**TP113** PIP mode
(VR119 E-E Level Adj.)

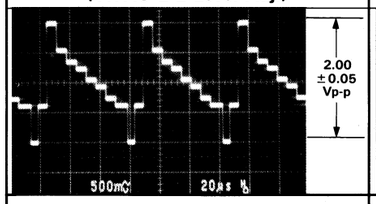


**TP108** VHS/S·VHS PB mode
(VR107&VR106 PB Input Level Adj.)

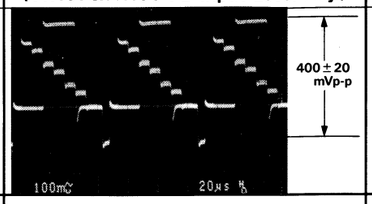


**TP106** VHS E-E mode
(VR101, VR102 White/Dark Clip Adj.)

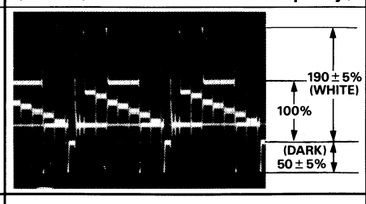


**TP107** VHS REC mode
(3.8MHz ~4.8MHz FM)

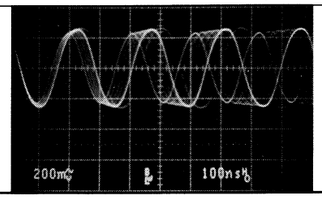


**X1201 Pin 3** PB mode
(PB Chroma Sig. via. B.P.F)

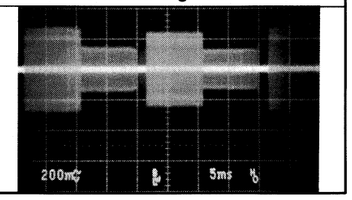


**TP108** E-E mode
(VR110 Input level Adj.)

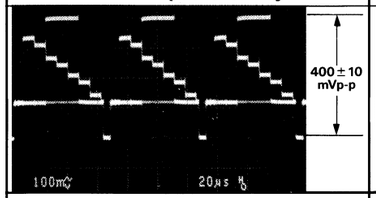


**TP149** PB mode
(VR109 PB Level Adj.)

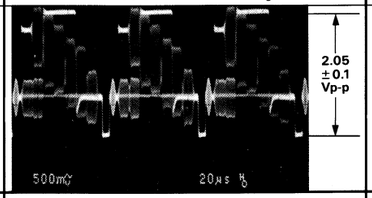


**TP110** S·VHS, E-E mode
(VR114, VR113 White/Dark Clip Adj.)

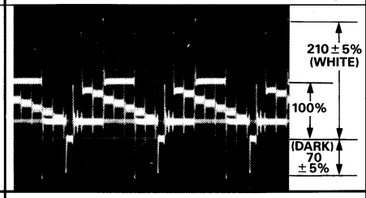


**TP127** REC/PB mode
(4.43MHz fsc)

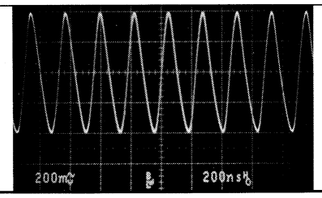


**TP150** E-E mode
(VR153 Chroma Level Adj.)

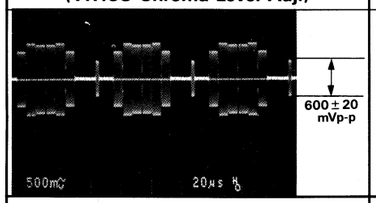


**TP129** S·VHS, PB mode
(VR121 DC Difference Adj.)

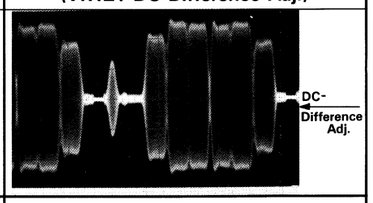


**CN184 Pin 2 (VP-1)** LPREC mode
(VR183 Chroma Rec. Current Adj.)

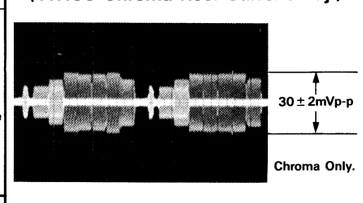


**IC111 Pin 5** E-E mode
(Composite Video Sig.)

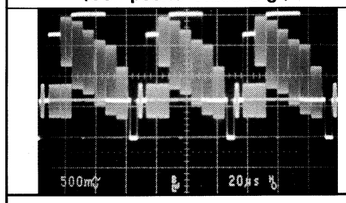


**TP145** E-E mode
(VR154, VR155 Chroma-SEP. Adj.)

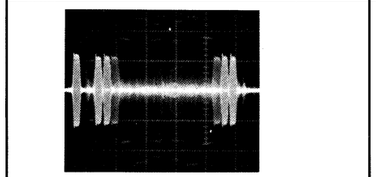

**TP150** PB mode
(VR191 CNR Input Level Adj.)

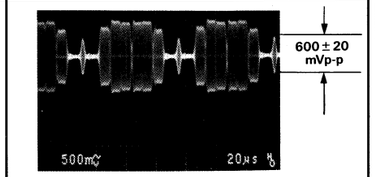


**VHS LP REC mode**
(VR181 Y-Rec Current Adj.)

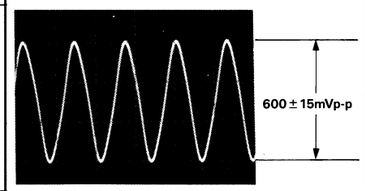


**Q1093 Emitter** E-E mode
(Y-Sig. via. L.P.F)

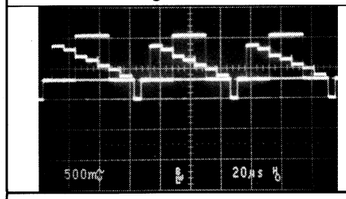


**TP144** E-E mode
(VR156, VR157 Y-SEP. Adj.)

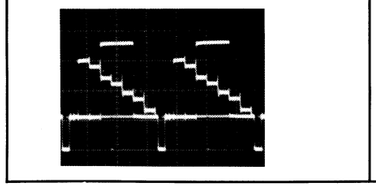

**TP142** PB mode
(VR192, L1902 CNR Adj.)

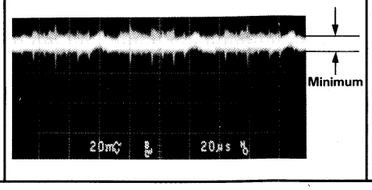


**S·VHS LP REC mode**
(VR182 Y-Rec. Current Adj.)

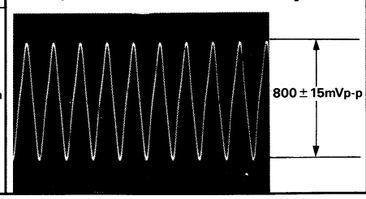


**Q1390 Base** PB mode
(Envelope Sig.)

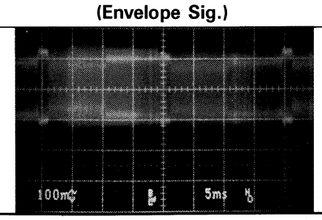


16 17 18 19 20 21 22 23 24 25 26 27 28 29 30 31

# AUDIO BLOCK DIAGRA

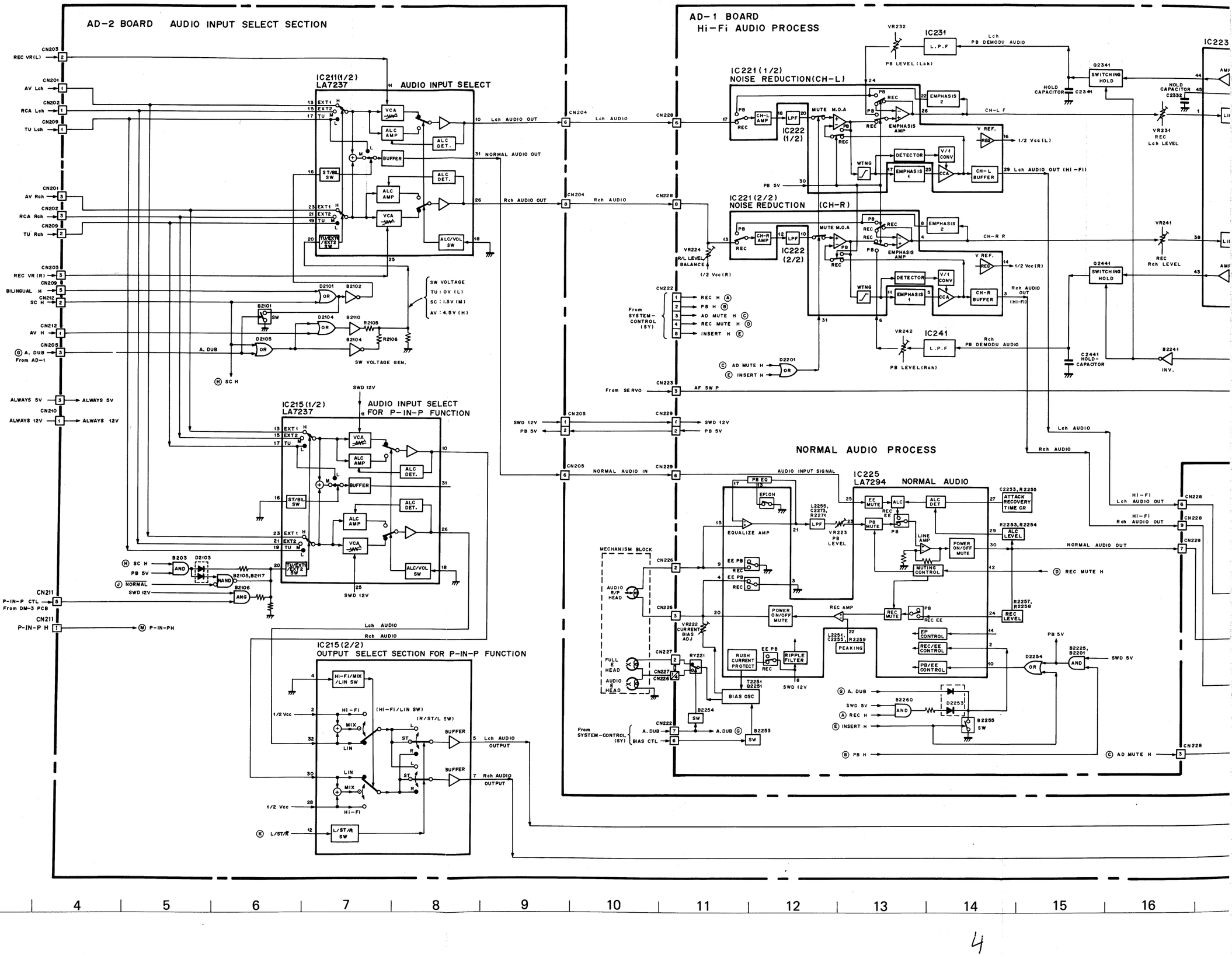

# AUDIO BLOCK DIAGRAM

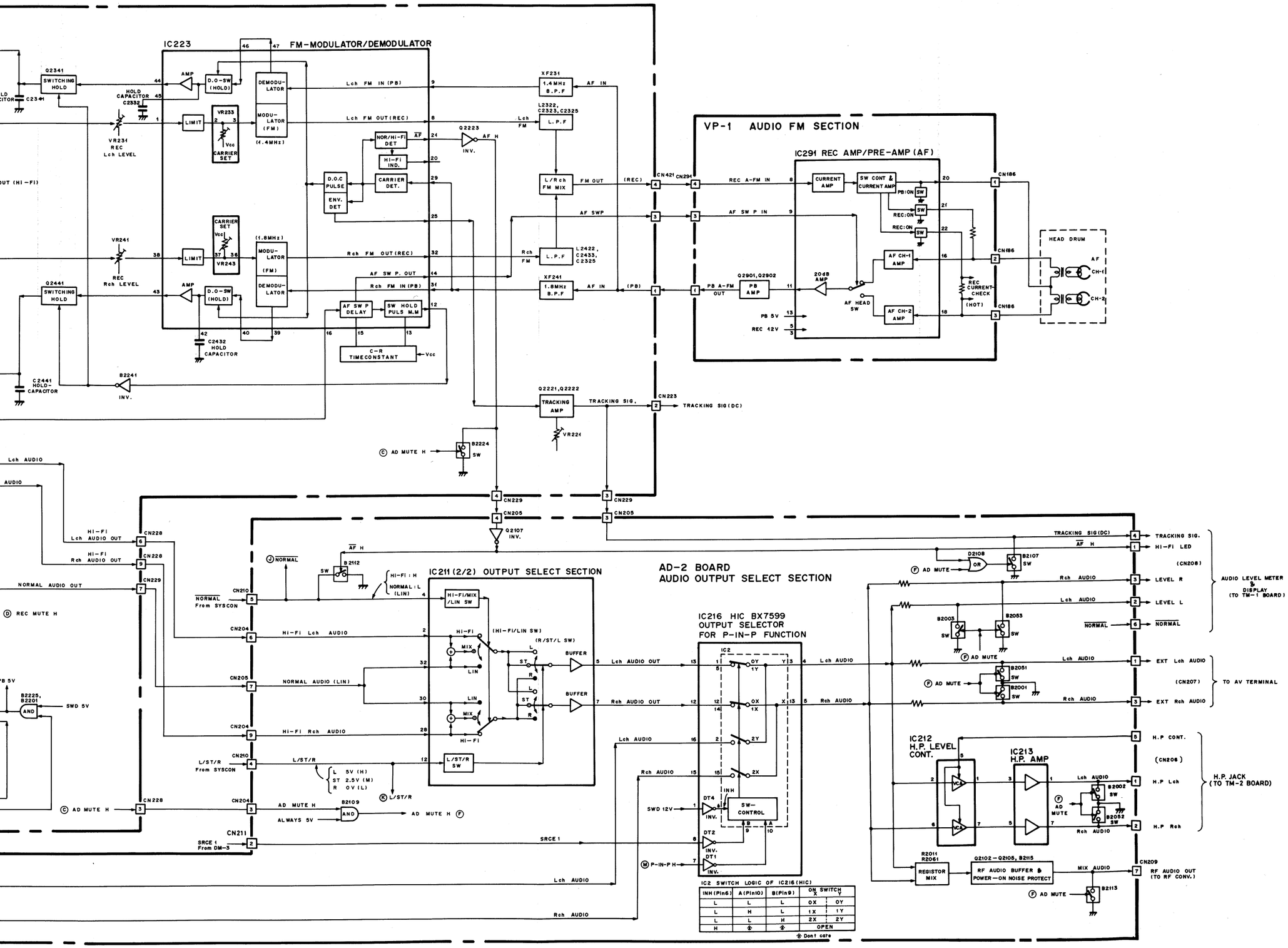


C

FM619 Q4
FM619 K4

# DIGITAL MEMORY BLOCK DIAGRAM

**D**
**FM619 Q4**
**FM619 K4**

DM-1 ANALOG PROCESS FOR DIGITAL MEMORY (MAIN BOARD)

IC474(2/2) PARENT/CHILD INPUT SELECT

IC474(2/2) PAL CHROMA ENCODER

IC472 INV.

IC473(1/3) MEMORY W/R CONTROL SIG. GENERATON

IC473(2/3)

IC477 PAL CHROMA DEMODULATOR

(CHILD Y/C OUT TO MEMORY)

(CHILD Y/C IN FROM MEMORY)

DM-3 DIGITAL MEMORY CIRCUIT BLOCK

IC3 A/D CONVERTER

IC4 D/A CONVERTER (Y)

IC5 D/A CONVERTER (R-Y)

IC6 D/A CONVERTER (B-Y)

IC1 MEMORY CONTROL GATE ARRAY

IC2 MEMORY (320x256x6bit 0.5M DRAM)

DM-4 MEMORY CONTROL BLOCK

IC751 DIGITAL SUB MPU

IC752(1/2)

IC752(2/2)

SYSTEM CONTROL CIRCUIT

AUDIO/VIDEO SIGNAL SELECT

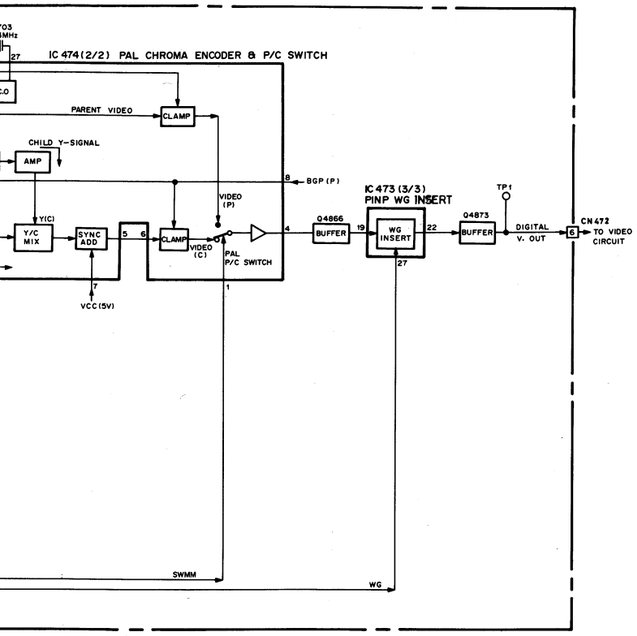


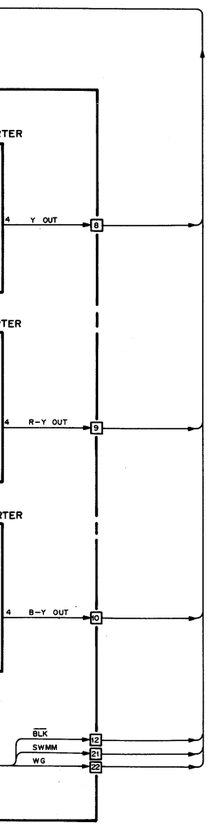


## MC-2 Adapter

### MECHANISM CONNECTION

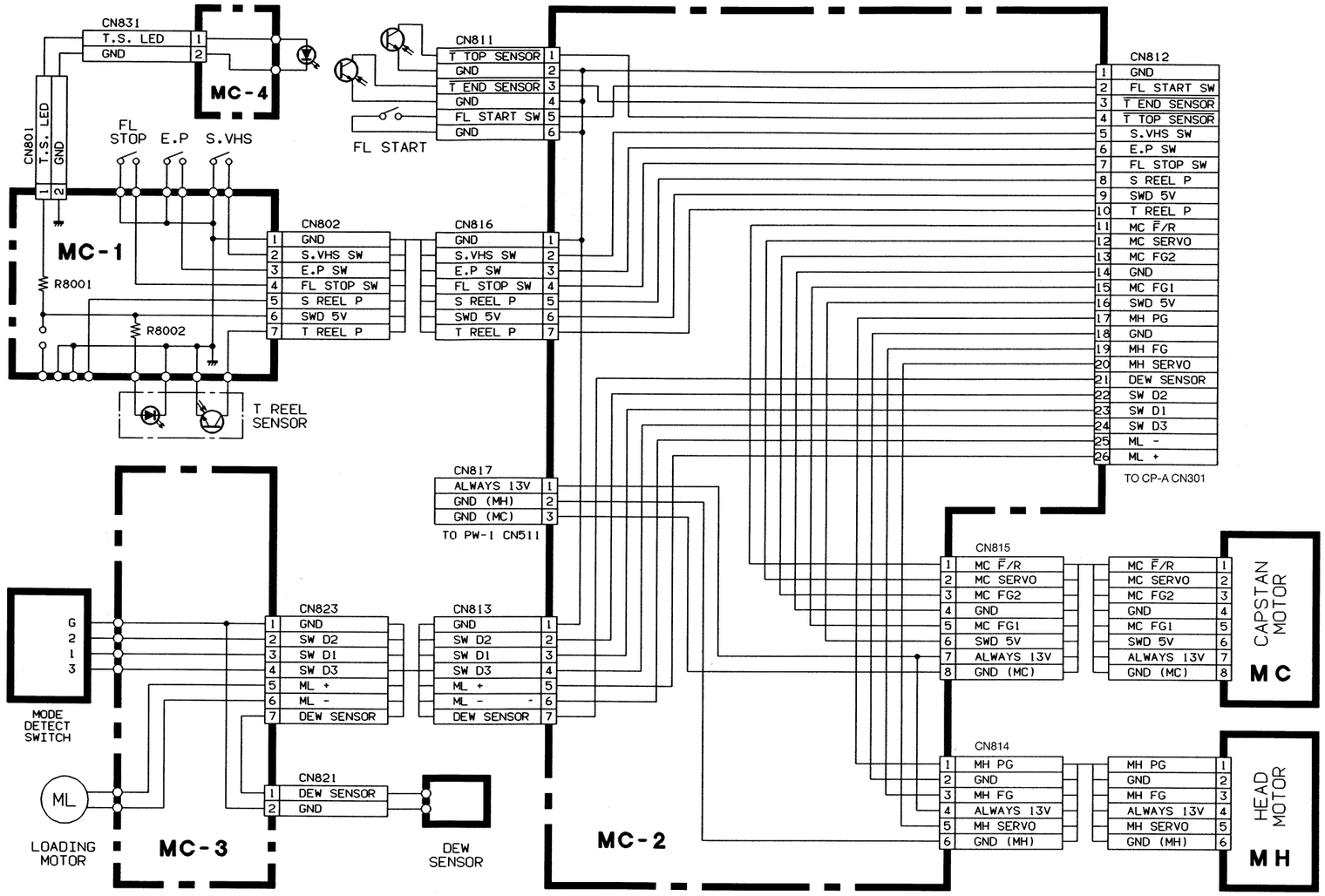


16 17 18 19 20 21 22 23 24 25 26 27 28 29 30 31

# Ablaufsteuerung und Servo
## SYSTEM CONTROL & SERVO BLOCK DIAGRAM

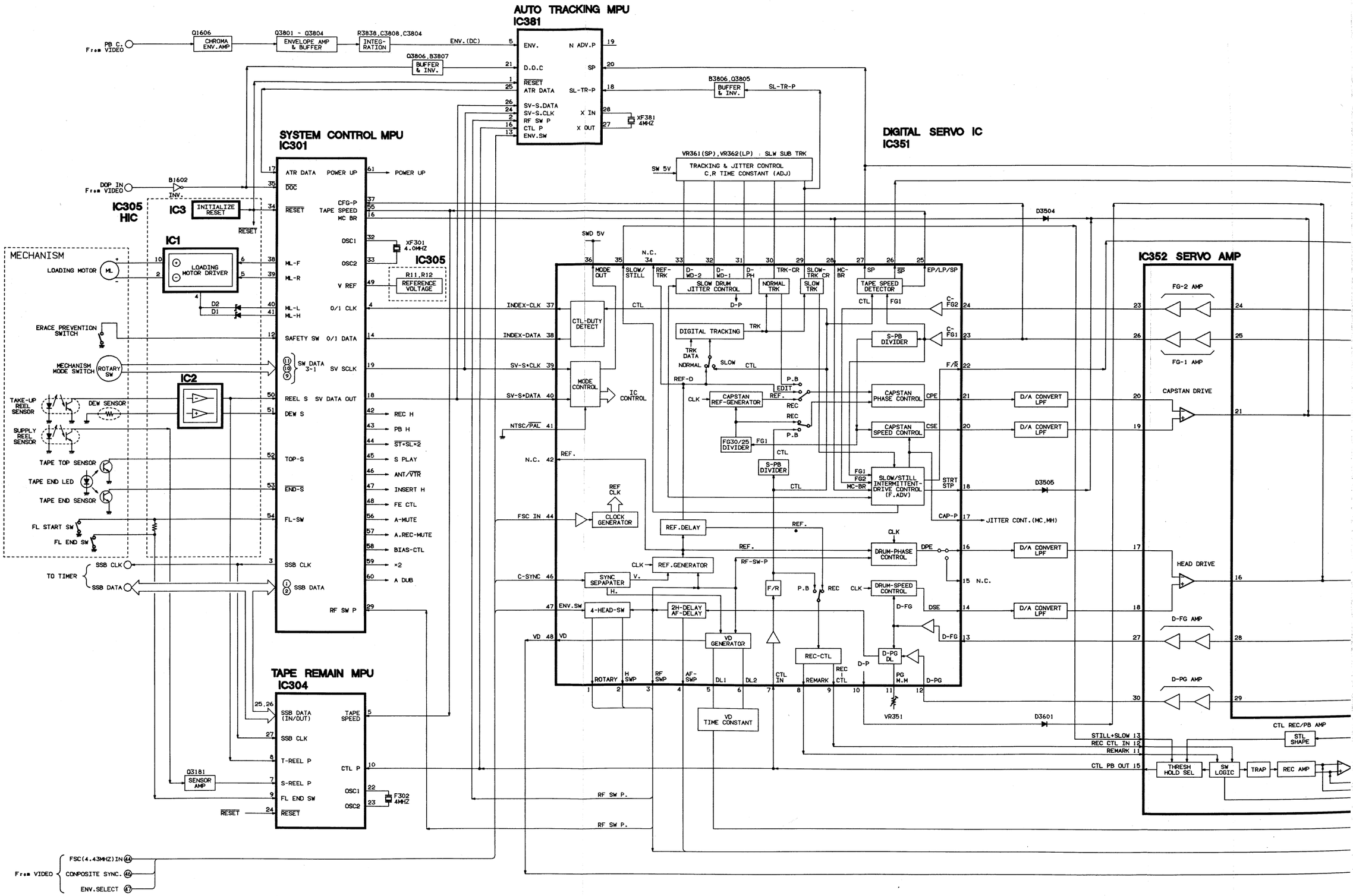

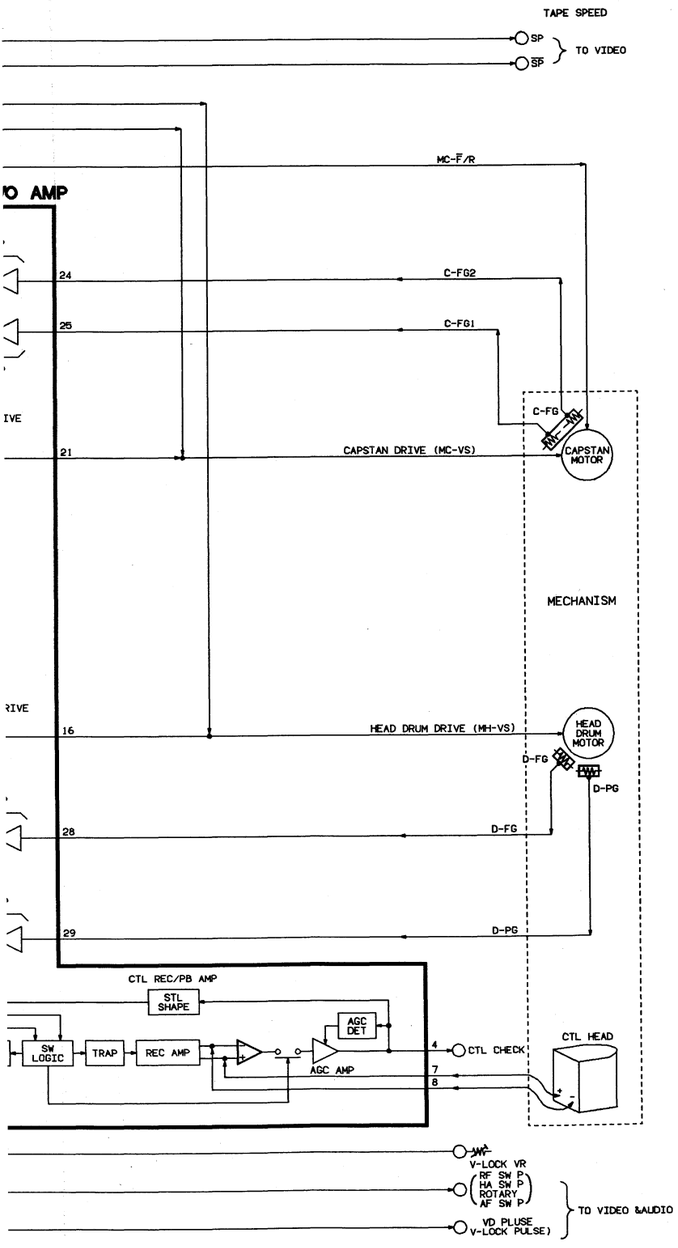


## Modulator
### RF CONVERTER

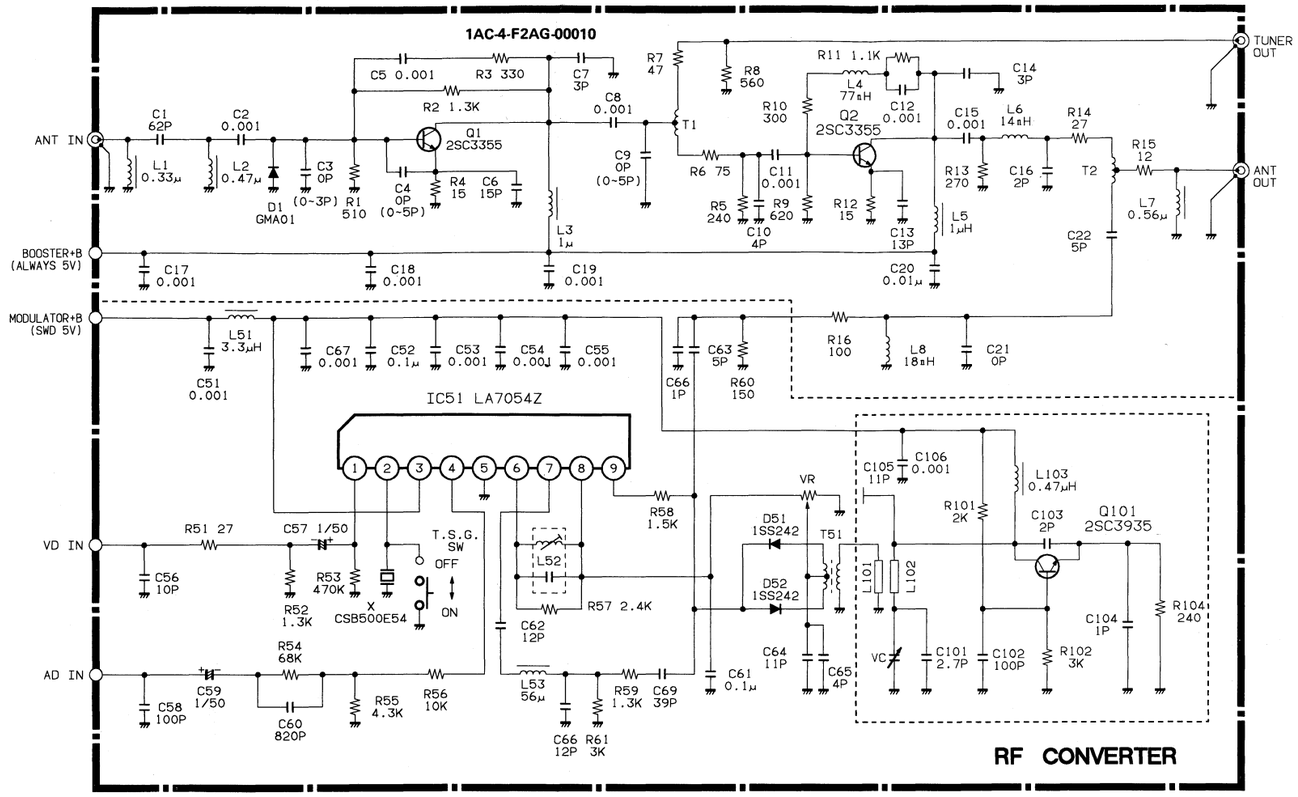


## Modulator
### RF CONVERTER

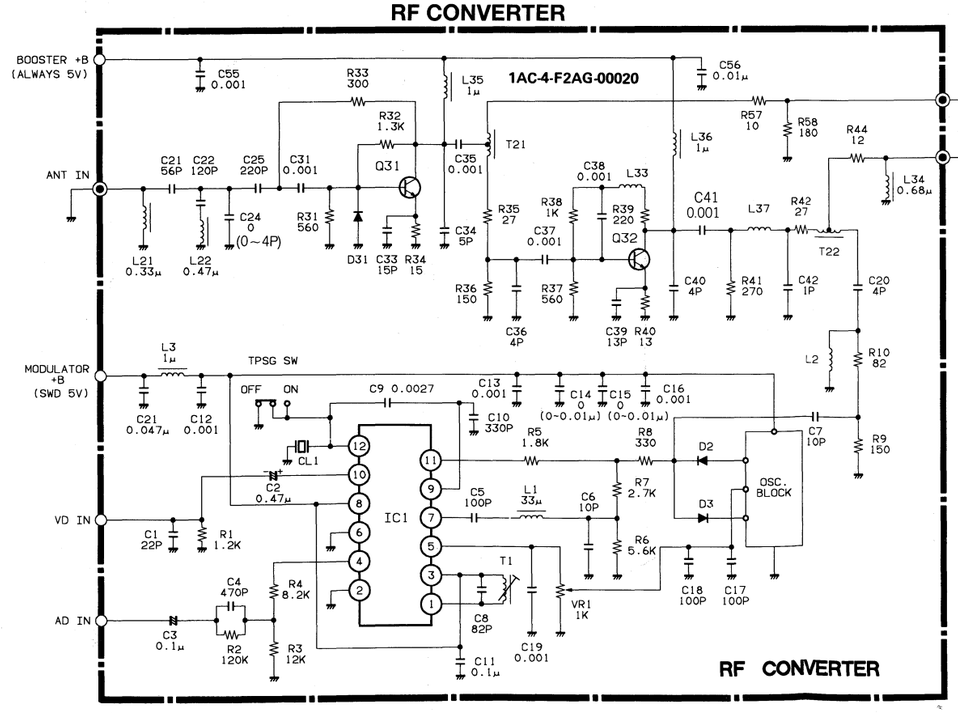


NOTE

IC1 : AJ7080

Q61 : 2SC2480 OR EQUIVALENT
D2,D3 : HSM276 OR EQUIVALENT
D31 : 1SS133,1SS83 OR EQUIVALENT

OSC BLOCK

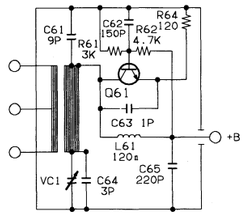


**E**

**FM619 Q4**
**FM619 K4**

15 16 17 18 19 20 21 22 23 24 25 26 27 28 29 30 31

## Netzteil PW-1, 2
## POWER SUPPLY

**PW-1**

1AC0B11A06100

**PW-2**

1AC0B11A06200

IC521, IC522, IC523 : REG.

IC521 SI-3050C

IC523 SI-3090C

IC522 SI-3050C

D5021 LB156

C5021,5022 1000P/1K

C5021

C5022

R5022

R5022 2.7M 1/2W

F5001 T1.6A 250V

L5001 68mH

C5001 0.22μF

C5002 0.1μF (0.068μF)

C5003 1000P/400

C5004 1000P/400

C5005 2200P/400

C5006 2200P/400

R5011 33K 2W

R5001 390K

R5002 390K

R5003 390K

R5004 390K

R5005 10 1W

R5006 33K 2W

C5007 82/400

C5008 680P/2K

C5009 0.047/630

D5001 AP01C

D5002 1SS244

R5007 220 1W

D5003 1SS244

C5010 1/16

C5011 15000P/50

IC501 STK73605 REG.

C5012 27000P/50

R5008 560

D5004 PC113

C5013 22/10

R5012 560

Q5001 2SC536E

R5010 0.47 2W

PC501 AC 220~240V

CN501 B R / B L

T5001

D5101 AG01

L5101

R5101 560

C5112 0.1/50

L5102 10μH

D5102 FMU-G2Y

C5101 47/50

C5102 100/20

C5106 4.7/50

C5107 1000/16

C5111 1000/16

C5113 0.1/50

R5103 6.34K 1/6W

Q5102 2SC3070 SWITCH

R5102 330

R5108 5.6K

R5109 4.7K

C5105 47/50

R5105 49.2K

D5107 MTZ33A

D5108 GMA01

R5111 47

IC511 L5431

R5104 1.5K 1/6W

B5101 SWITCH

R5110 270K

D5105 AG01

Q5101 2SA984F REG.

L5104

C5104 2200/16

C5109 470/10

D5104 FMU-G2Y

C5103 100/25

C5108 4.7/50

L5103

D5103 AG01

D5106 AG01

C5110 330/6.3

R5107 12K

R5106 3.9

D5109 MTZ6.2C

C5201 0.1/50

C5202 220/10

D5201

D5202

C5206 0.1/50

C5203 0.1/50

R5201 2.4K

D5203 MTZ3.6A

C5204 100/16

C5205 220/10

C5207 0.1/50

JWA51

JWA51

G N D / UNREG 7V / UNREG 7V / ALWAYS 13V / ALWAYS 5.8V / ALWAYS 12V / ALWAYS 12V / SWD 5V / SWD 12V

CN511 WH
1 ALWAYS 13V
2 G N D(MH)
3 G N D(MC)
TO MC-2 CN817

CN512 YL
1 ALWAYS 12V
2 G N D
3 ALWAYS 5.8V
4 G N D(M)
5 ALWAYS 13V
6 ALWAYS 45V
7 POWER UP
8 G N D(L.M.)
9 UNREG-7.5V
TO CP-A CN541

CN513 WH
1 HEATER +(R)
2 HEATER -(L)
3 ALWAYS -30V
4 G N D
5 ALWAYS 12V
6 ALWAYS 5.8V
TO TM-3 CN731

CN514 WH
1 SWD 12V
2 SWD 5V(A)
3 SWD 5V(D)
4 G N D
5 G N D
TO DM-1 CN471

VOLTAGE : STOP MODE

B5101---2SA1345 or DTA144ES

**PW-2 POWER SUPPLY P.C.B.**

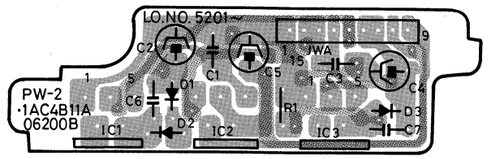


**PW-1**

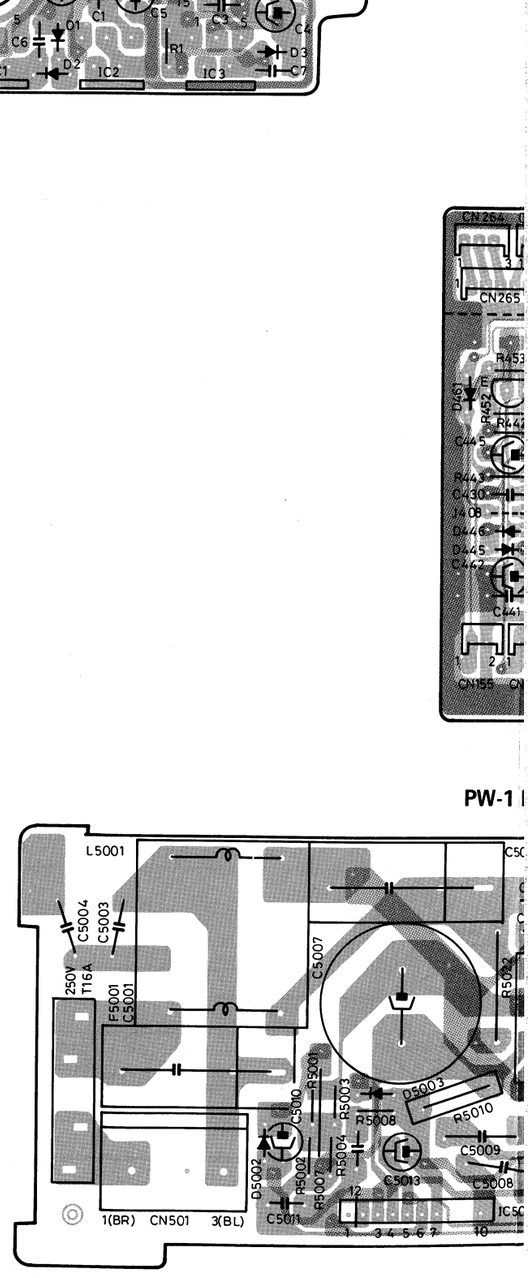


F

FM619 Q4
FM619 K4

1 2 3 4 5 6 7 8 9 10 11 12 13 14 15 16 17

**WER SUPPLY P.C.B.**

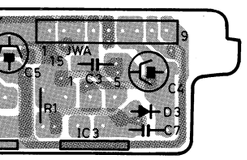

**CP-2 VIDEO (1) P.C.B.**

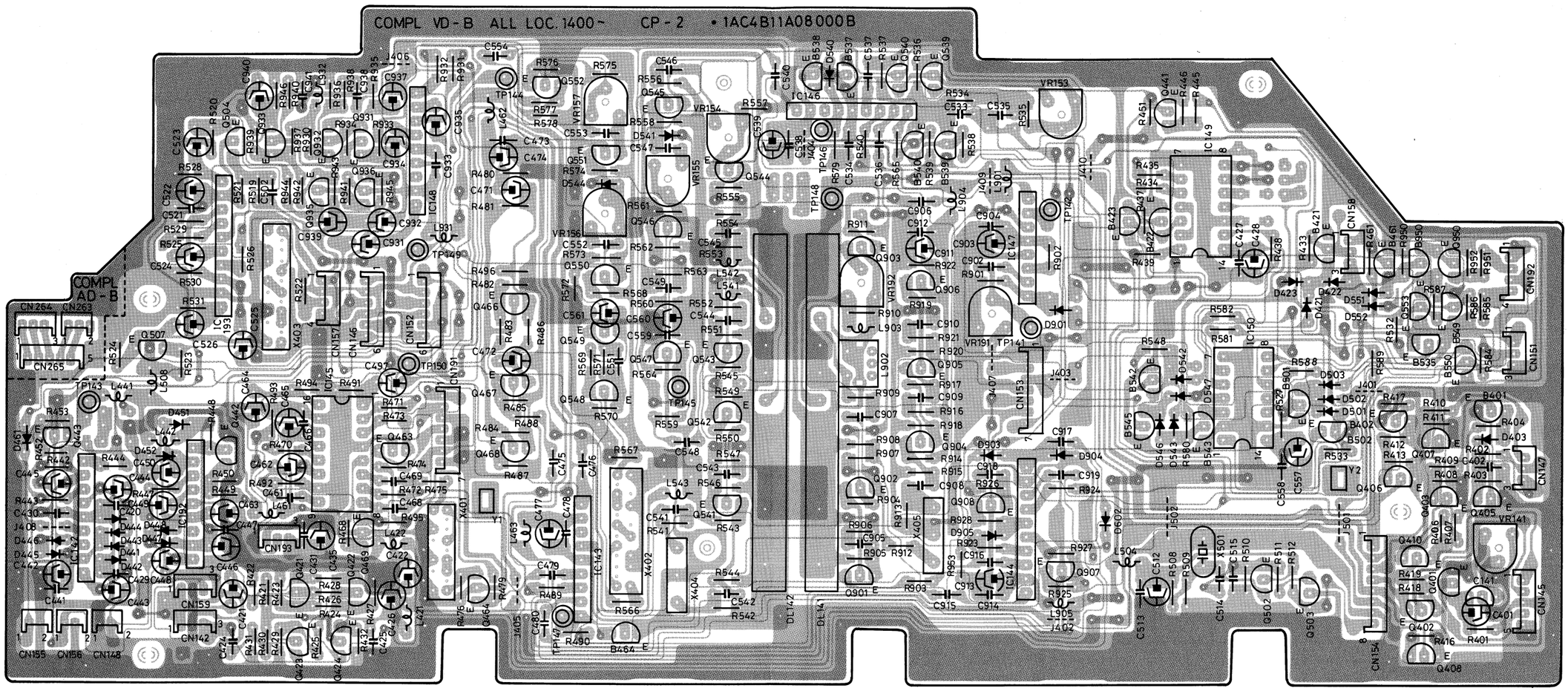


**PW-1 POWER SUPPLY P.C.B.**

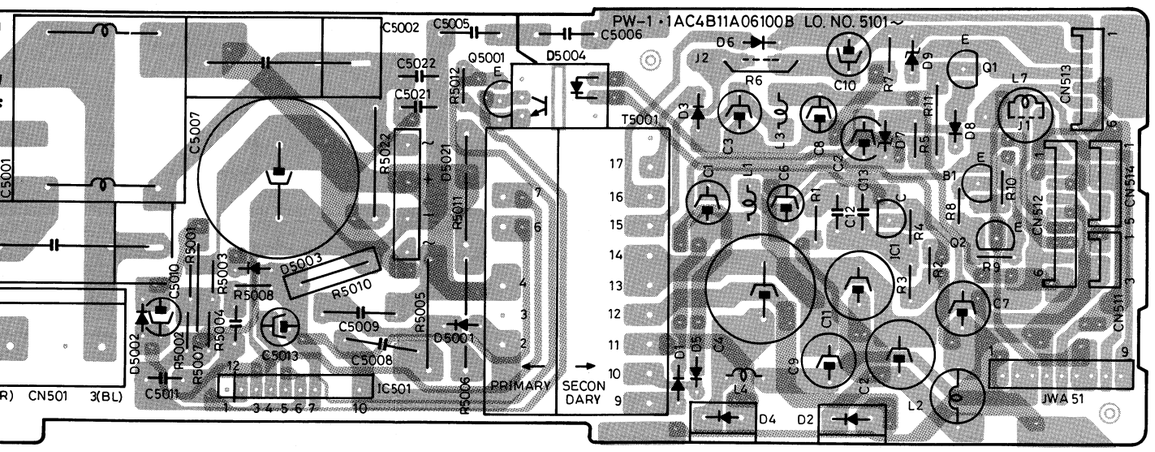


**TM-5 SWITCH & AUDIO INPUT P.C.B**

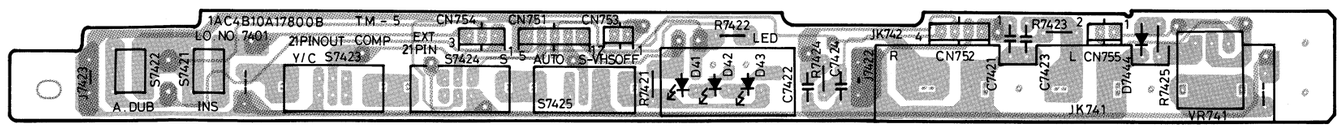


**Kopfhörerbuchsenplatte**
**TM-6 H.P. JACK P.C.B.**

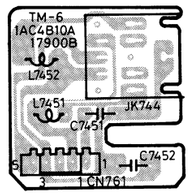


**S-Buchsenplatte (input)**
**TM-7 S. INPUT P.C.B.**

16 17 18 19 20 21 22 23 24 25 26 27 28 29 30 31

## VD-1 VIDEO (2) & MIC AMP. P.C.B.

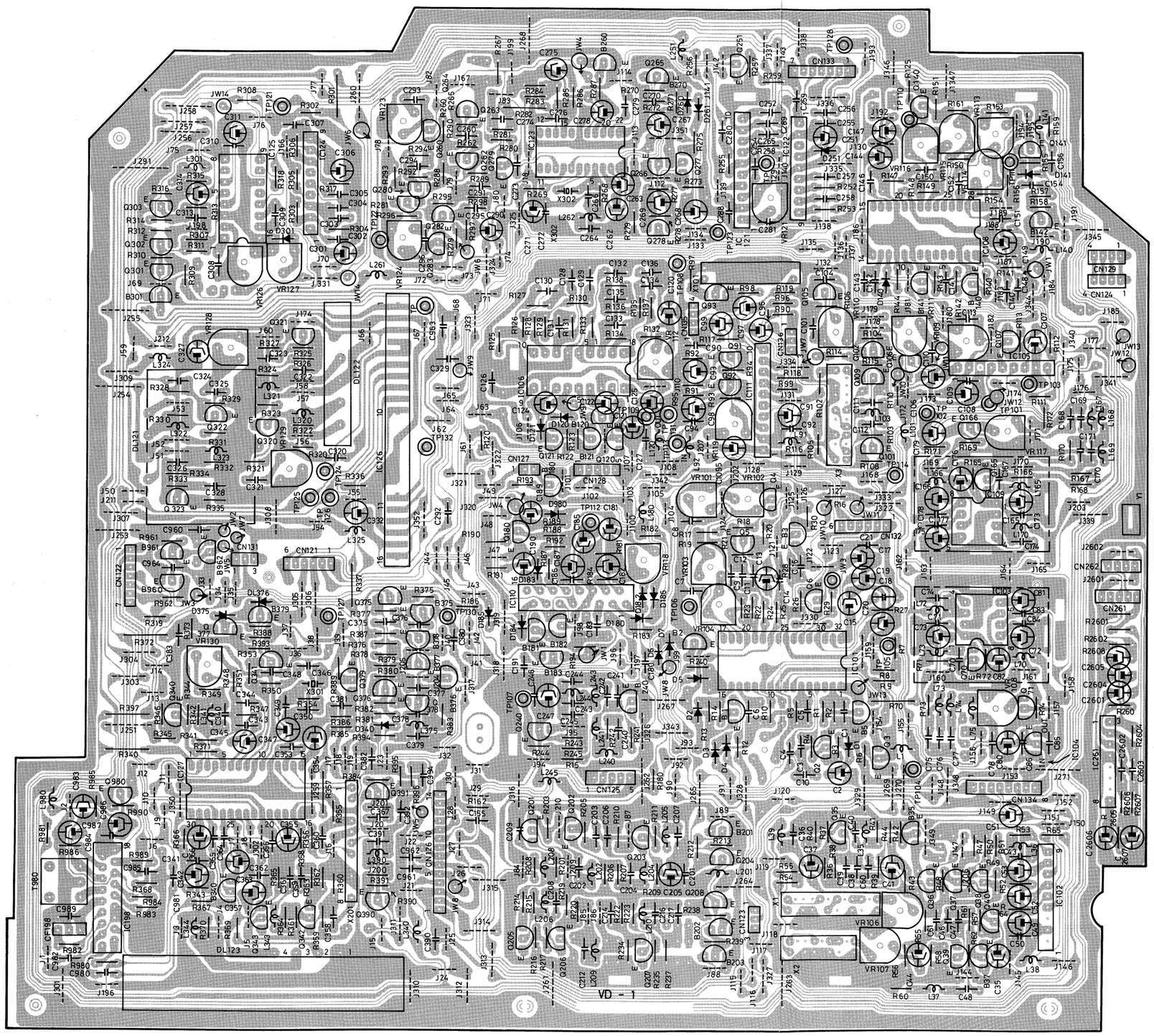


## Videovorverstärker
## VP-1 VIDEO, PRE-AMP

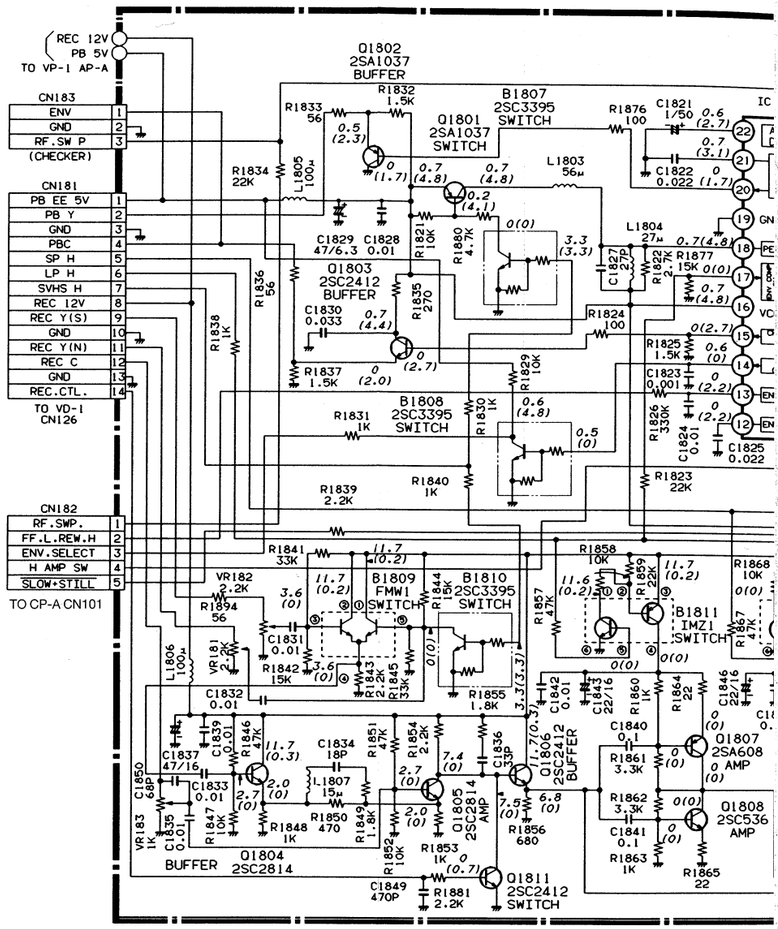


## Video- + Audio-Vo
## VP-1 VIDEO & AUDI

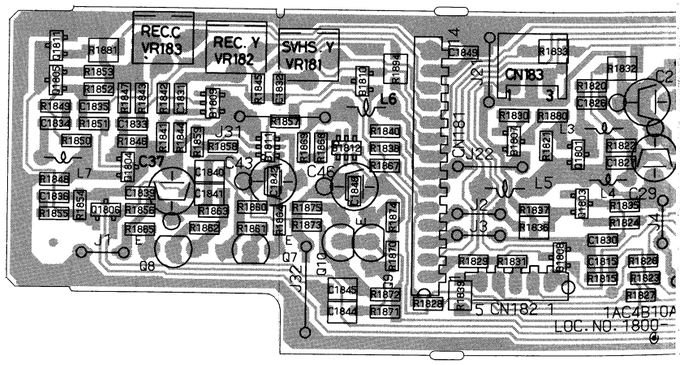

## Videovorverstärker
### VP-1 VIDEO, PRE-AMP

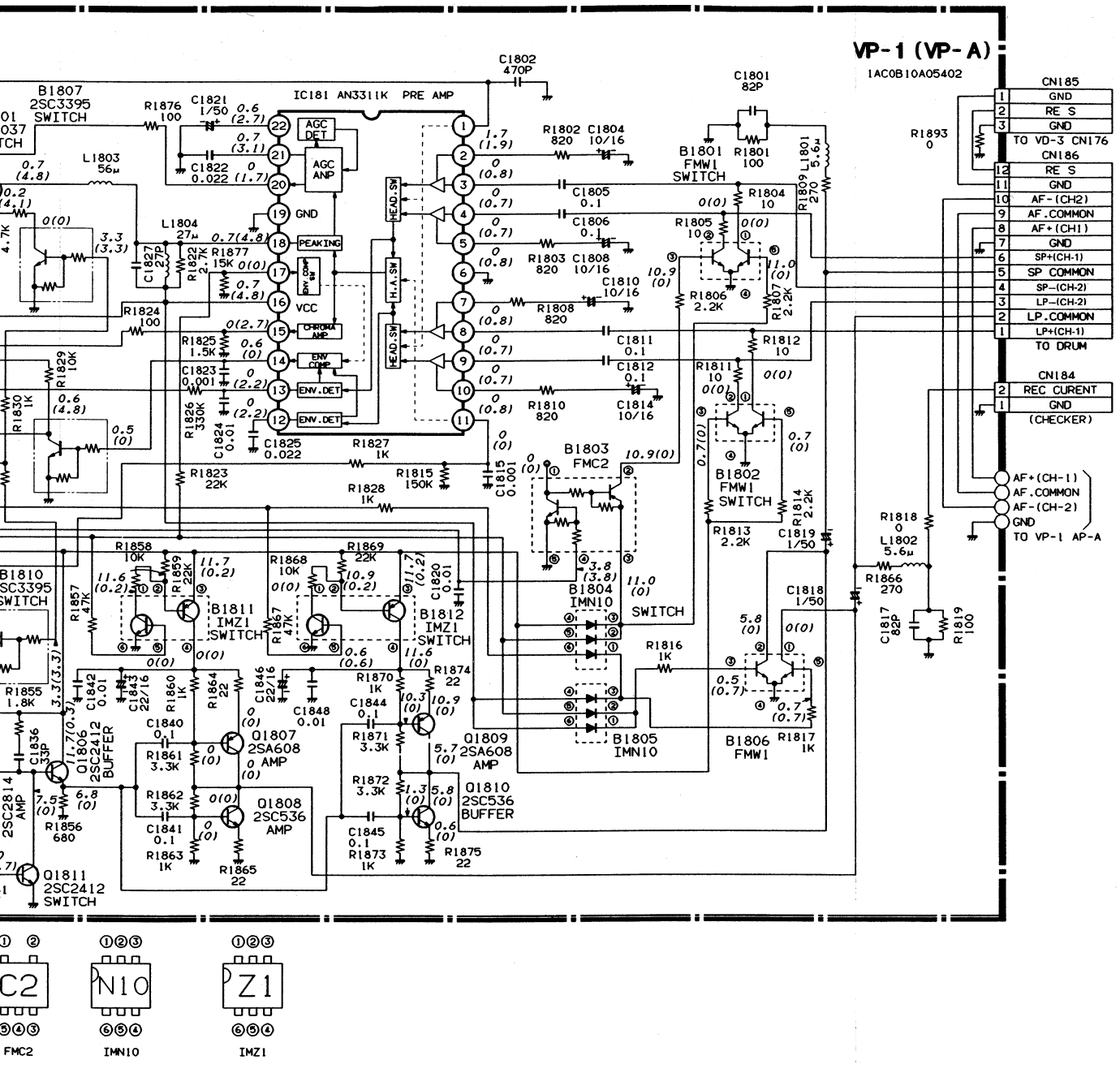


## Video- + Audio-Vorverstärker
### VP-1 VIDEO & AUDIO PRE-AMP P.C.B.

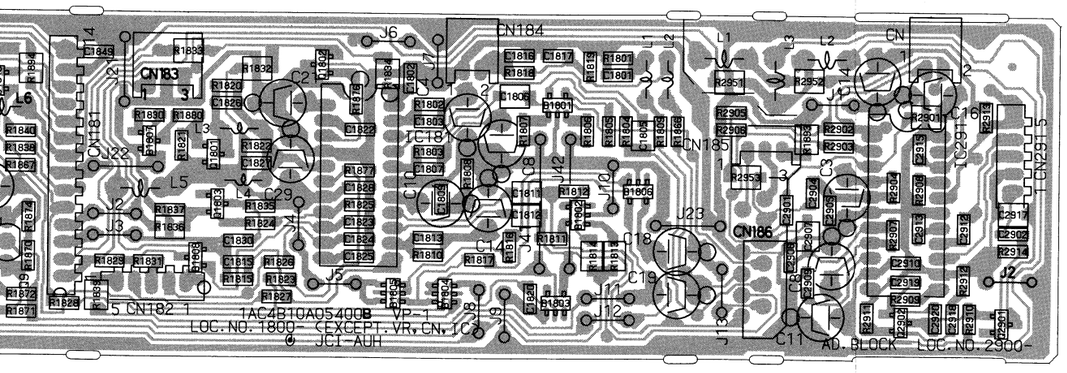


## Platine für rotierenden Löschkopf
### VD-3 FLYING ERASE P.C.B.

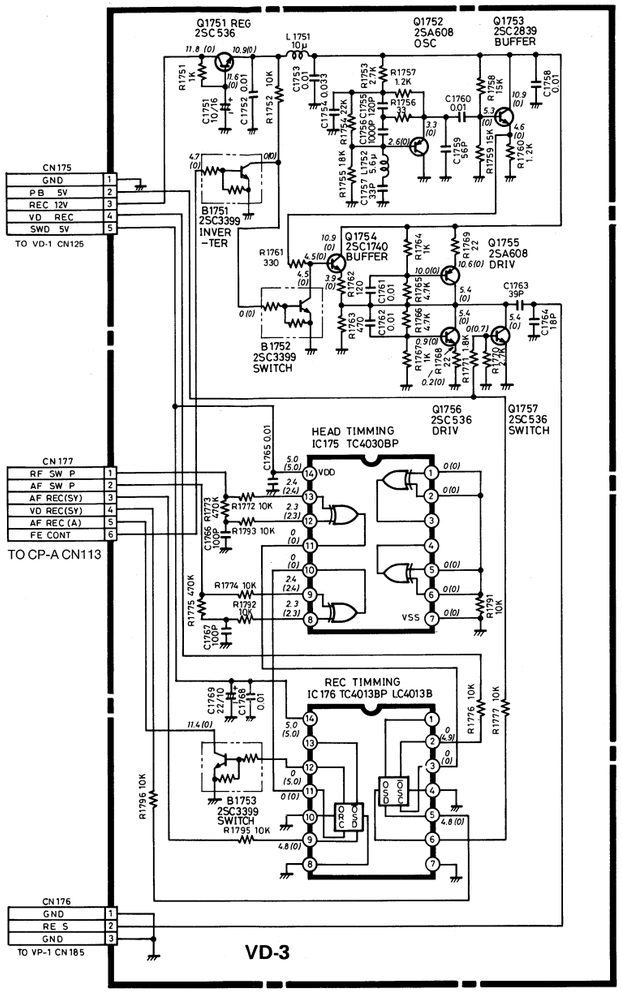


## Platine für rotierenden Löschkopf
### VD-3 FLYING ERASE P.C.B.

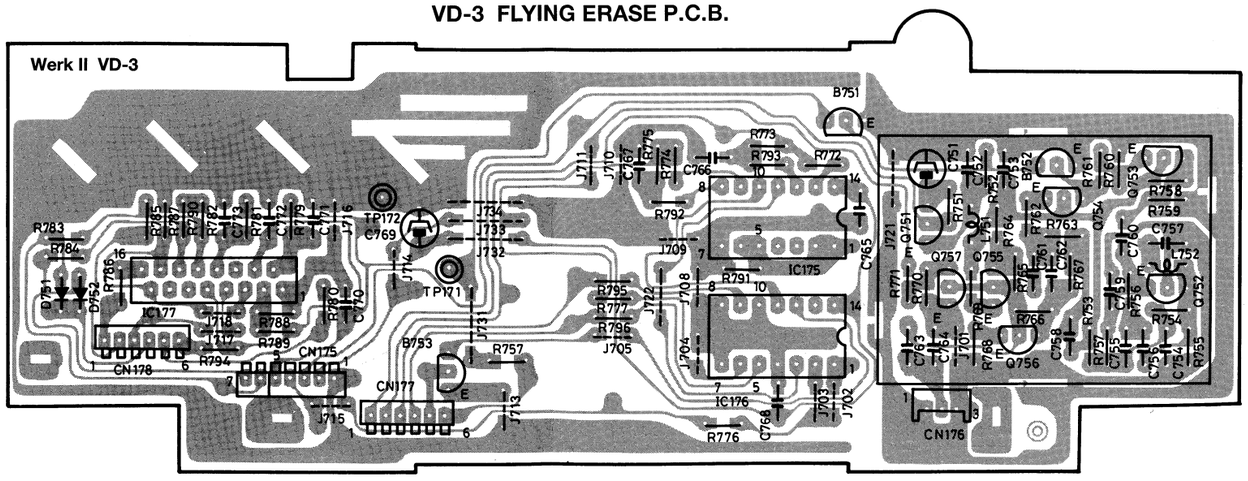


FM619 Q4
FM619 K4

# Automatische Spurnachführung, Restspielzeitkontrolle
## SY-2 AUTO TRACKING & TAPE REMAIN

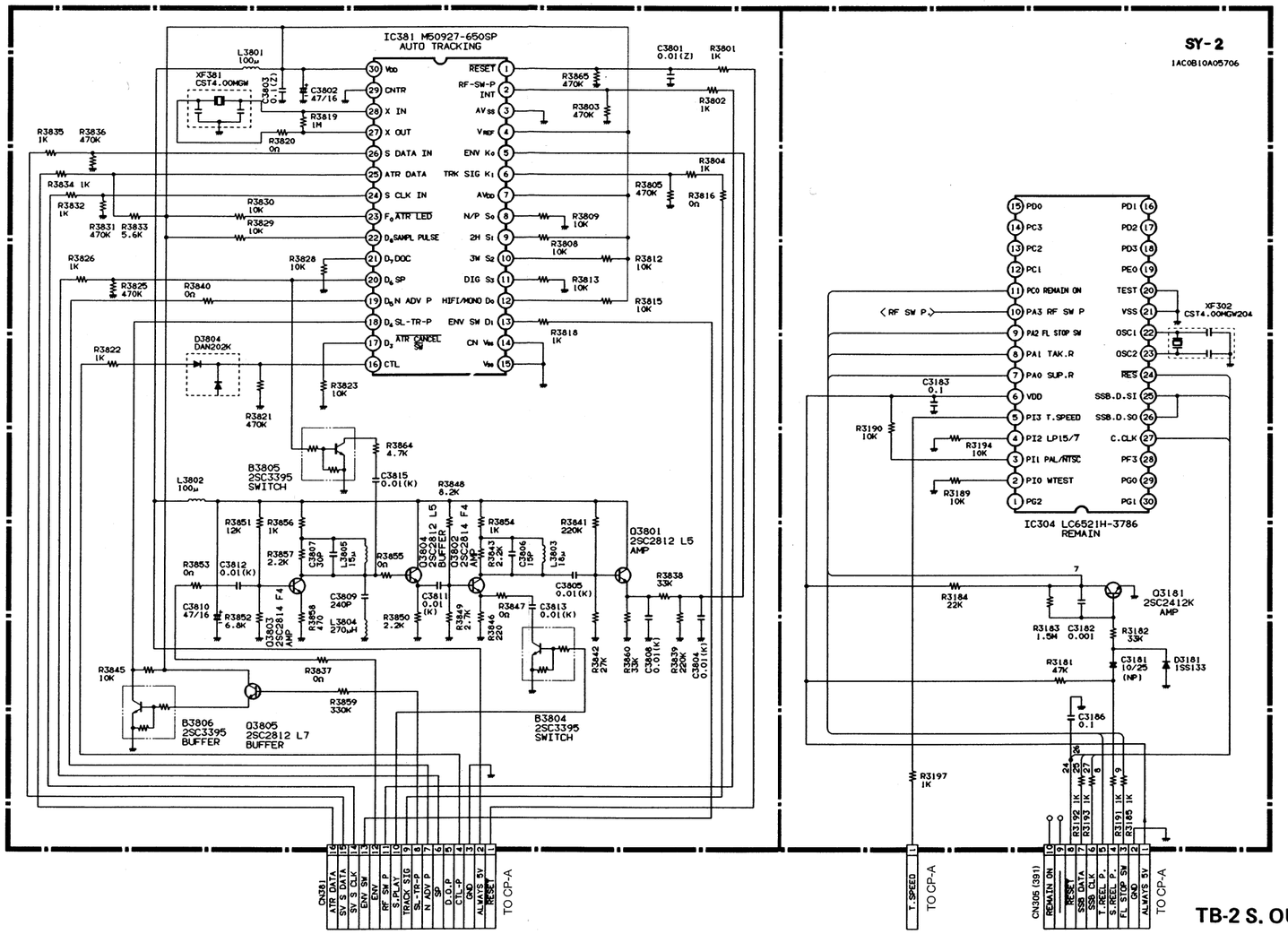


J

FM619 Q4
FM619 K4

## SERVO

| | | | | | |
|---|---|---|---|---|---|
| IC351 (LC7418) | | ⑳ | 5V, 17.053KHz | ⑮ | REC, 24mse |
| ③ | 4.8V, 20msec 20 msec | ㉓ | 4V, 0.66msec | ⑮ | P.B., 24 mse |
| ④ ㊷ | 5V, 20msec 20 msec | ㉚ | 3msec, 3V, 40msec | ㉕ | 0.6 |
| ⑤ | 0.4msec, 3V, 20 msec | ㊲ | 17μsec, 5V, 40msec | ㉖ | 0.66m |
| ⑦ | REC, 3.8V, 24msec 16 msec | ㊹ | 1Vp-p, 4.43MHz | ㉗ | 1.33mse |
| ⑦ | P.B., 3.9V, 24msec 16 msec | ㊻ | T = 20msec | ㉘ | 1.3 |
| ⑨ | 5V, 24msec 16 msec | IC352 (LA7122) | | ㉙ | 4( |
| ⑪ | 2.1msec, 3V, 20 msec | ③ | P.B., 40mV, 40msec | ㉚ | 40m |
| ⑫ | 3.9V, 40msec | ④ | P.B., 1.2Vp-p | | |
| ⑬ | 4V, 1.33msec = 750Hz | ⑦ ⑧ | REC, 3.2V, 24msec 16msec | | |
| ⑭ ⑯ ㉑ | 5V, 8.593KHz | ⑫ | 5V, 24msec 16 msec | | |

## TB-2 S. OUTPUT TERMINAL

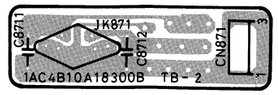


## TB-1 TERMINAL P.C.B.

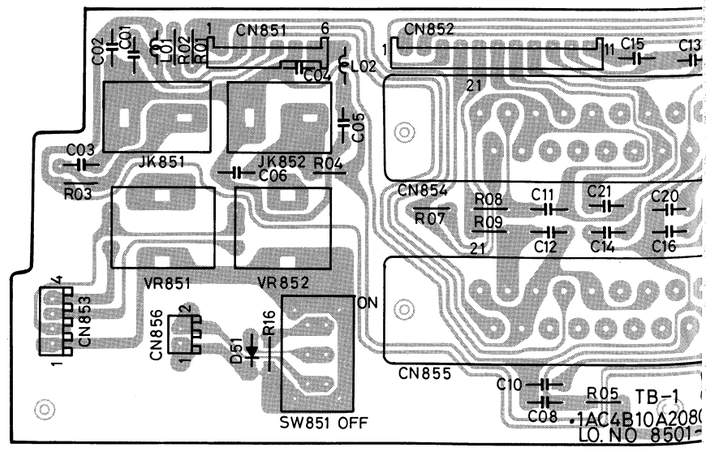


## SY-2 AUTO TRACKING & TAPE REMAIN

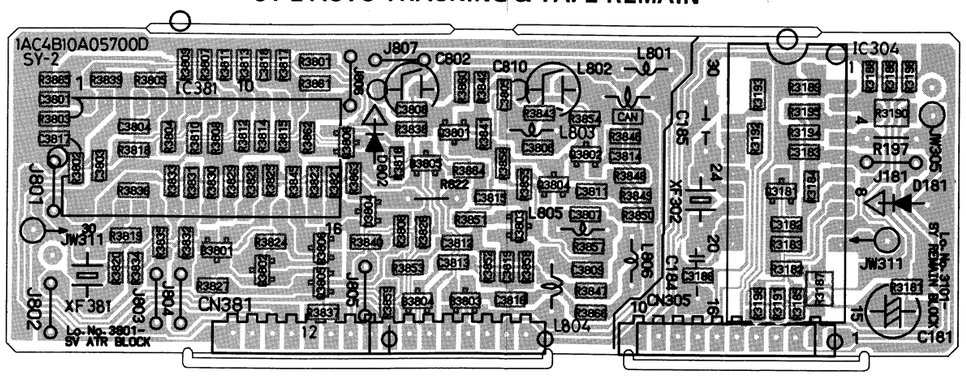


## S-Buchsenplatte (OUTPUT)
## TB-2 S. OUTPUT TERMINAL

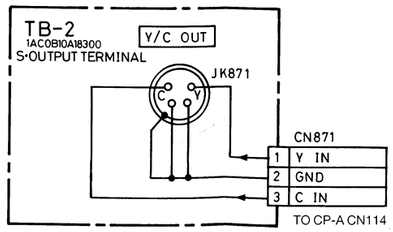


1 2 3 4 5 6 7 8 9 10 11 12 13 14 15 16 17

## CP-A SYSTEM CONTROL

| | | |
|---|---|---|
| 5V, 17.053KHz | ⑮ | REC: 3.8V, 24msec / 16msec<br>P.B.: 3.9V, 24msec / 16msec |
| 4V, 66msec | | |
| 3V, 3msec, 40msec | ㉕ | 20mV p-p, 0.66msec |
| 5V, 17μsec, msec | ㉖ | 4V, 0.66msec |
| 1Vp-p, 4.43MHz | ㉗ | 4V, 1.33msec = 750Hz |
| T = 20msec | ㉘ | 10mV p-p, 1.33msec |
| 352 (LA7122) | ㉙ | 150mV p-p, 40msec |
| 40mV, msec | ㉚ | 3.9V, 40msec |
| 1.2Vp-p | | |
| 3.2V, msec, 16msec | | |
| 5V, msec, 16msec | | |

## TERMINAL P.C.B.

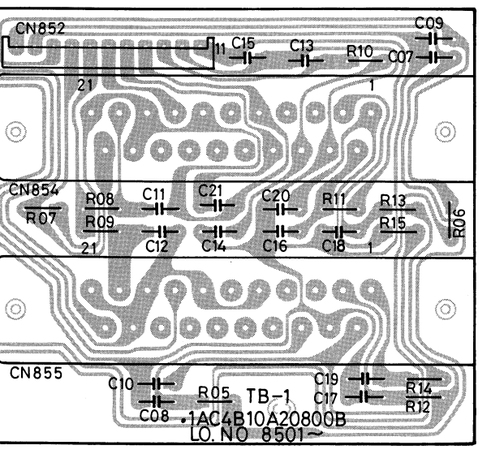


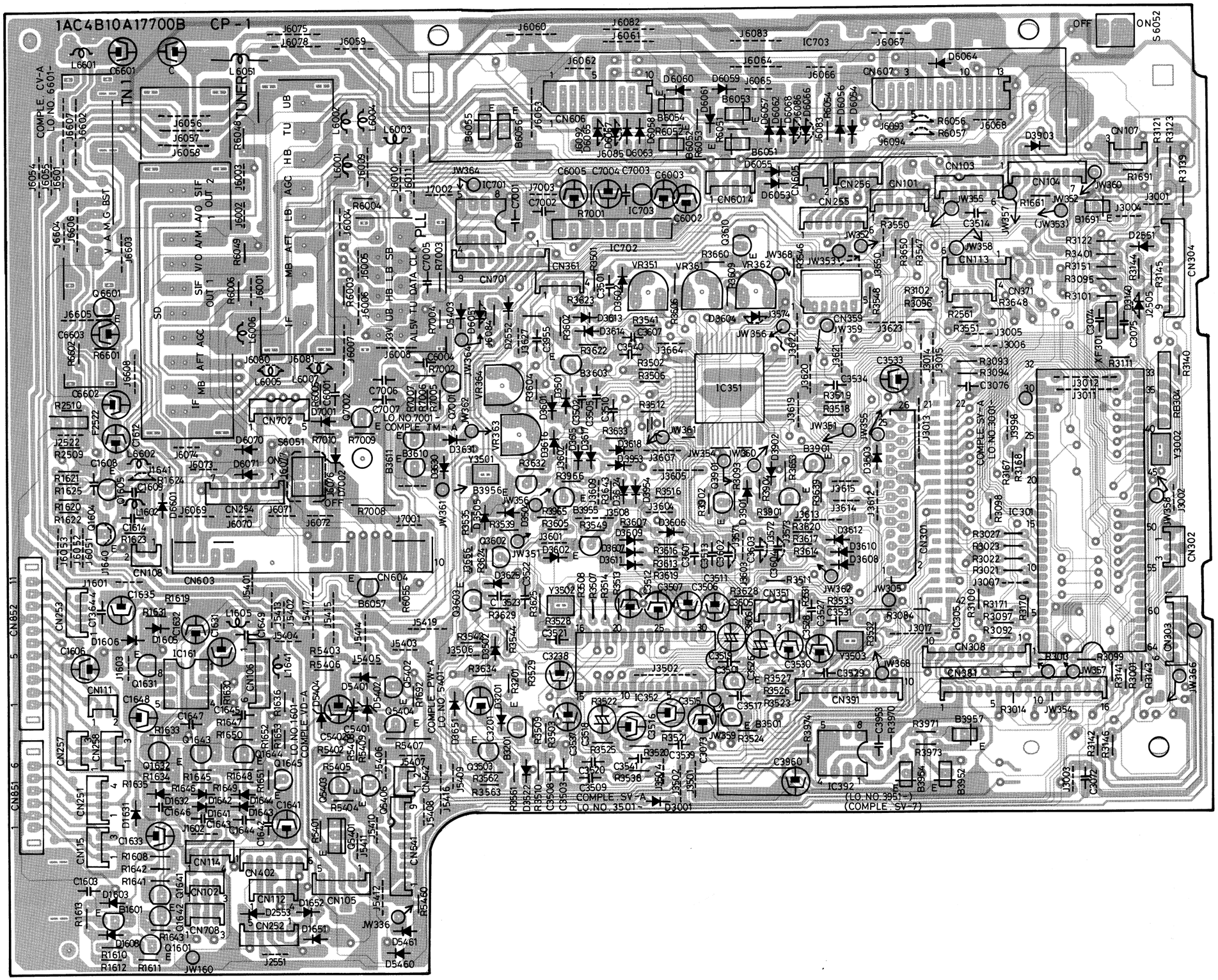

# TM-1,2 Bedienteil, Timer, Anzeige
# TB-3 TIMER, DISPLAY, TUNING CONTROL, SWITCH, MIC. AMP & MIC. JACK (FM619 K4)

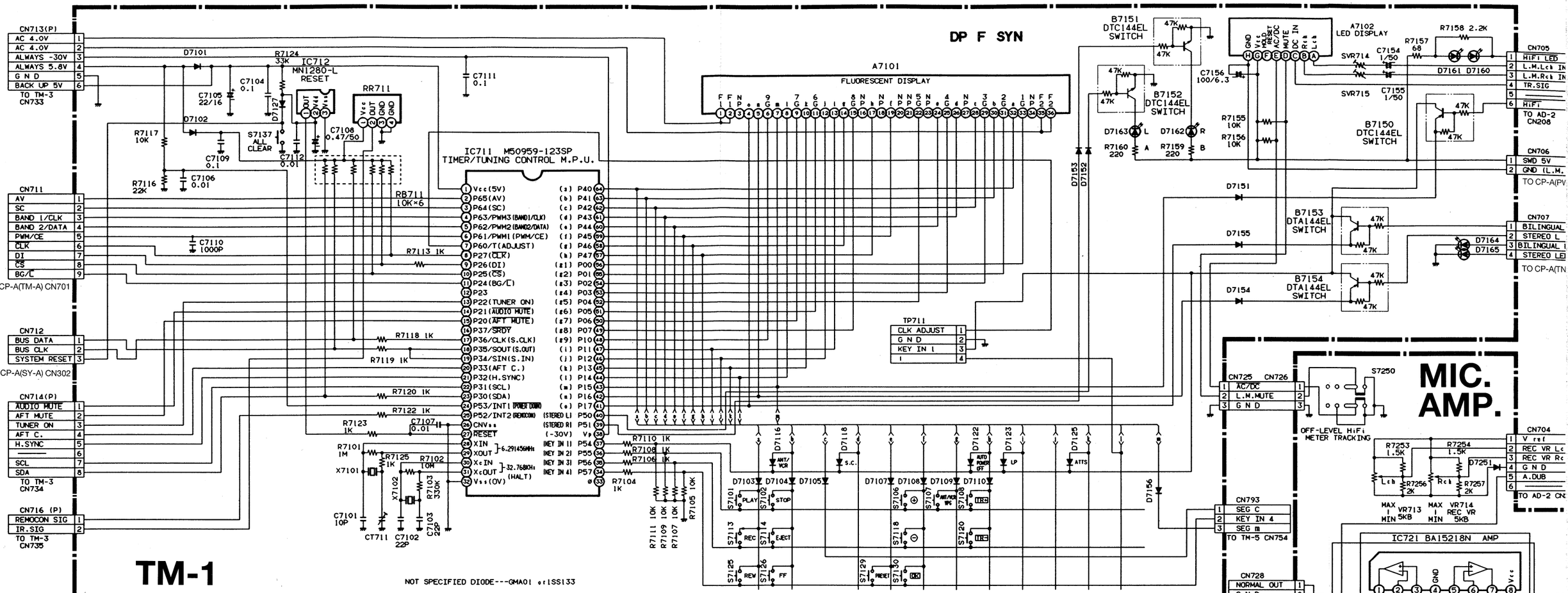


## ANODE CONNECTION

| | 9G | 8G | 7G | 6G | 5G | 4G | 3G | 2G | 1G |
|---|---|---|---|---|---|---|---|---|---|
| a | REC | TAPE | a1 | a1 | a1 | a1 | a1 | a1 | START |
| b | ▶ | PROG. | b1 | b1 | b1 | b1 | b1 | b1 | 7 |
| c | | SC | c1 | c1 | c1 | c1 | c1 | c1 | DP |
| d | ×2 | DATE | d1 | d1 | d1 | d1 | d1 | d1 | M(1) |
| e | ⊖ | TIMER | e1 | e1 | e1 | e1 | e1 | e1 | AFT |
| f | ▌ | DNR | f1 | f1 | f1 | f1 | f1 | f1 | ST |
| g | - | VTR | g1 | g1 | g1 | g1 | g1 | g1 | col.1 |
| h | - | OTR | / | \ | - | - | - | \ | DU |
| i | ◖◗ | M | a2 | a2 | a2 | a2 | a2 | a2 | STOP |
| j | ▶▶ | - | b2 | b2 | b2 | b2 | b2 | b2 | S |
| k | - | EP | c2 | c2 | c2 | c2 | c2 | c2 | - |
| l | - | VPS | d2 | d2 | d2 | d2 | d2 | d2 | H |
| m | - | - | e2 | e2 | e2 | e2 | e2 | e2 | M(2) |
| n | ◀◀ | - | f2 | f2 | f2 | f2 | f2 | f2 | - |
| o | ▮▮ | LP | g2 | g2 | g2 | g2 | g2 | g2 | col.2 |

## GRID ASSIGNMENT / DISPLAY

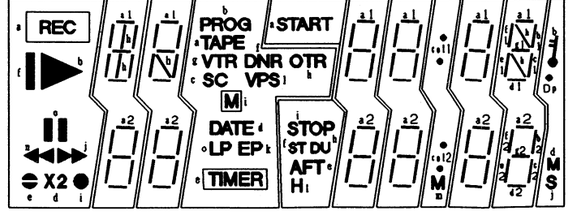

## COMPL. TN-5 NICAM DECODER (FM619 K4 ONLY)

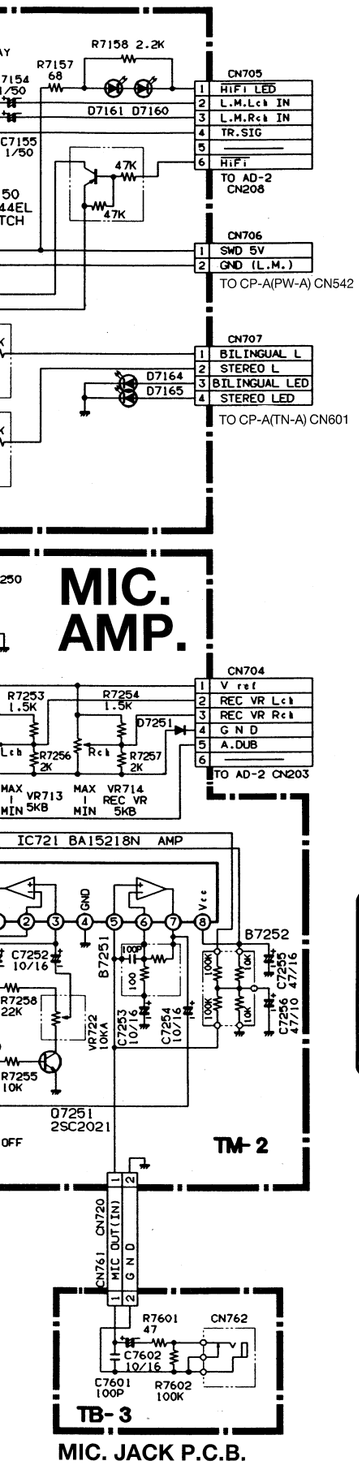


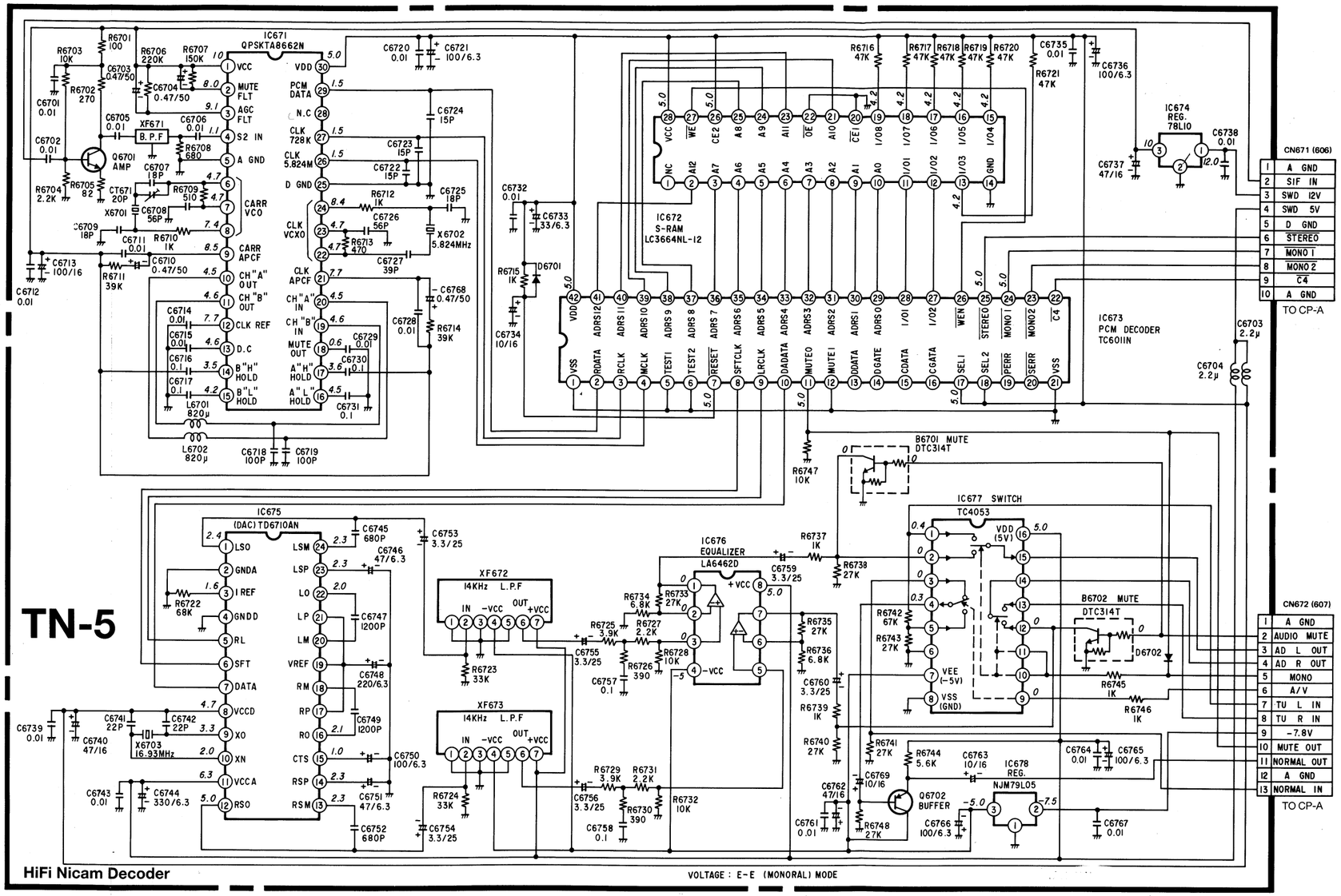


O
FM619 Q4
FM619 K4

TB-3 MIC. JACK P.C.B. (FM619 K4)

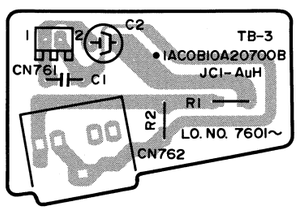


TM-2 MIC. AMP & SWITCH P.C.B. (FM619 K4)

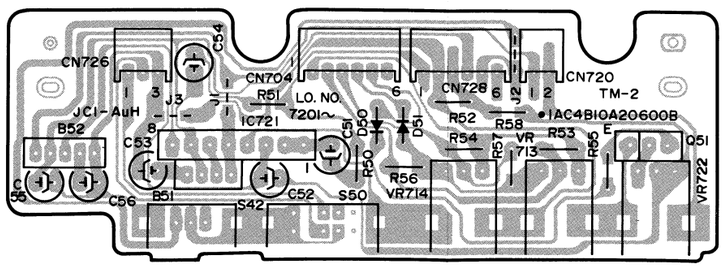


TN-5 NICAM DECODER P.C.B. (F619 K4 ONLY)

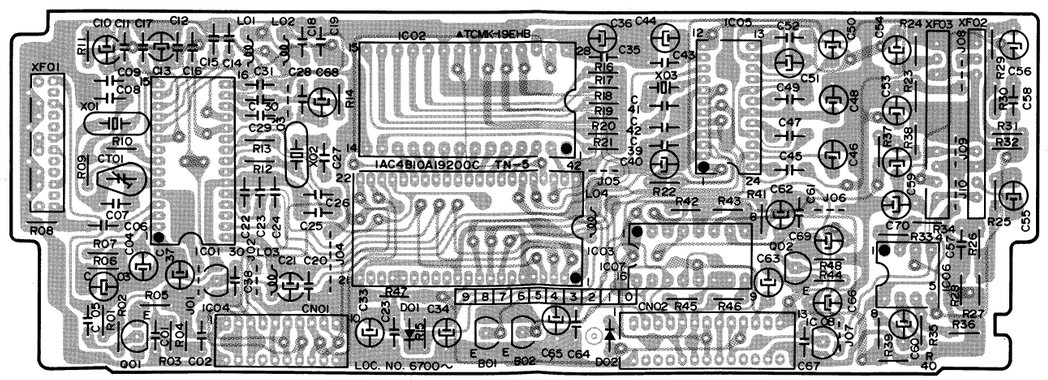


15 16 17 18 19 20 21 22 23 24 25 26 27 28 29 30 31

11

## COMPL. TN-5 NICAM DECODER (FM619 K4 ONLY)

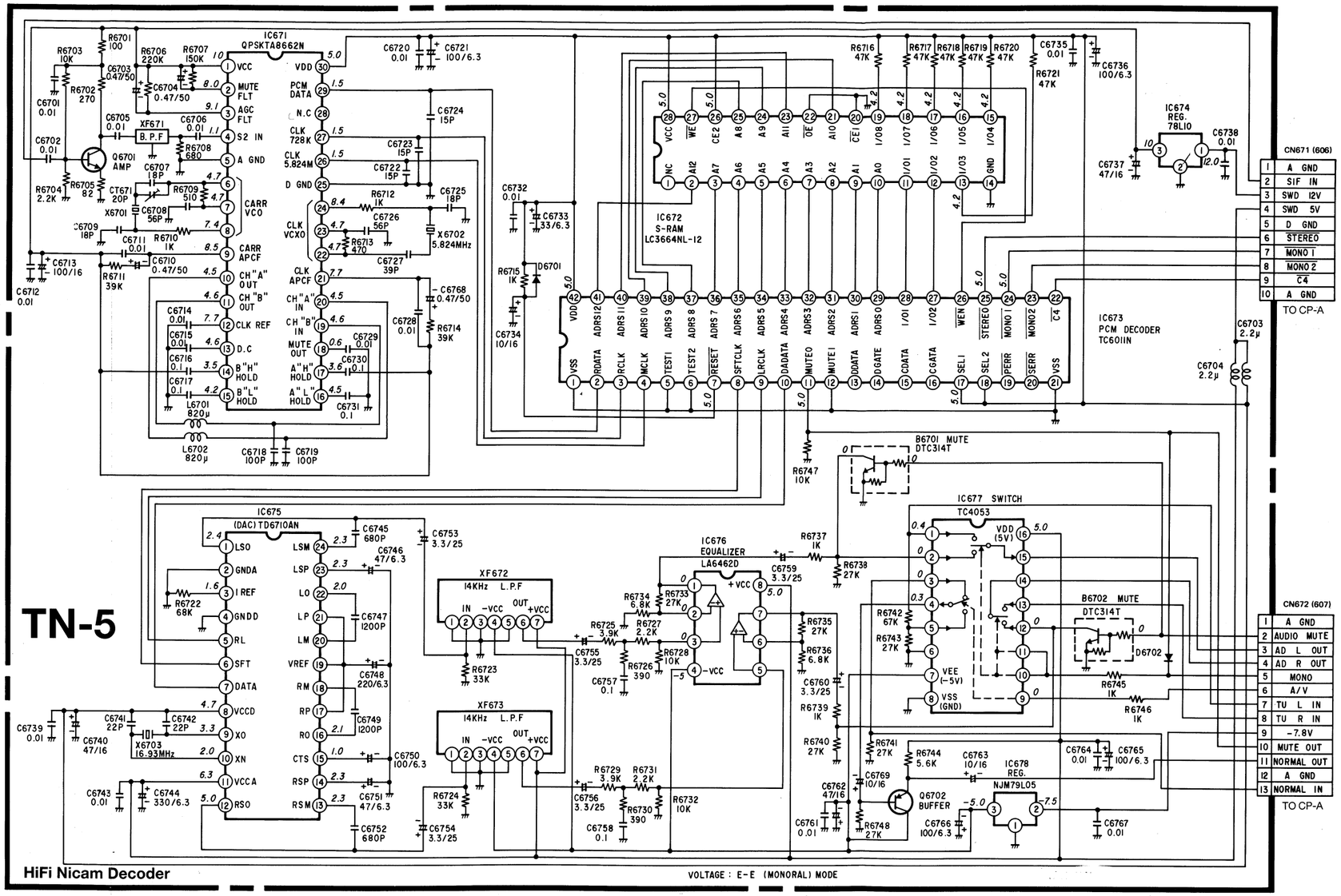


**O**

**FM619 Q4**
**FM619 K4**

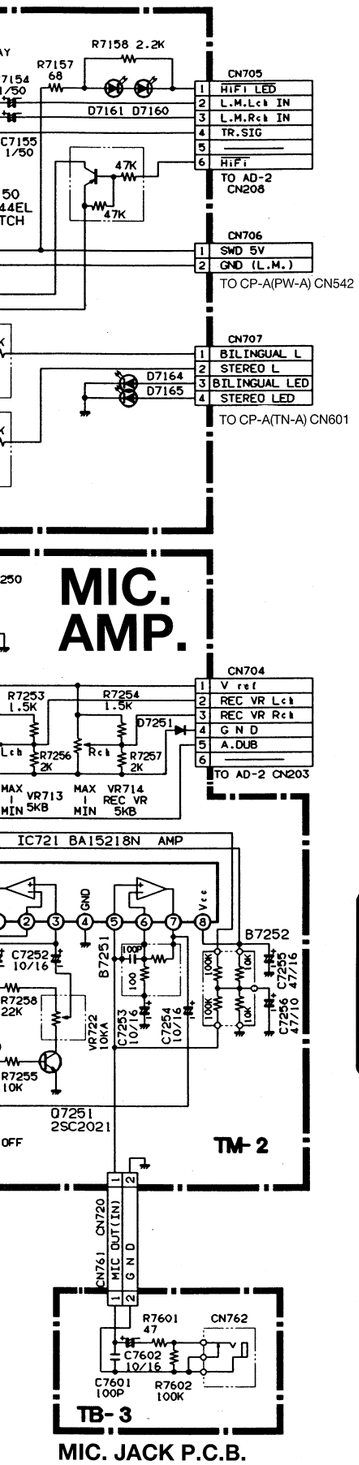


### TB-3 MIC. JACK P.C.B. (FM619 K4)

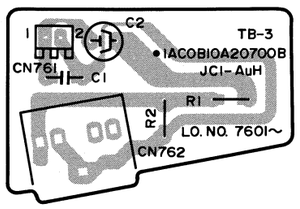


### TM-2 MIC. AMP & SWITCH P.C.B. (FM619 K4)

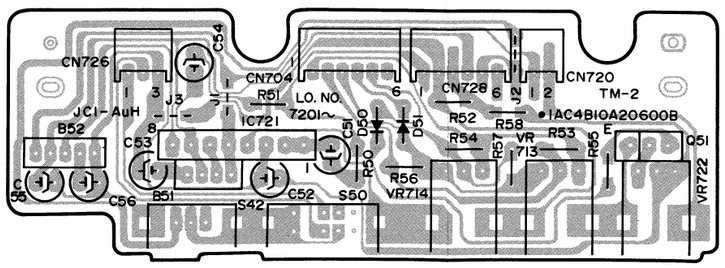


### TN-5 NICAM DECODER P.C.B. (F619 K4 ONLY)

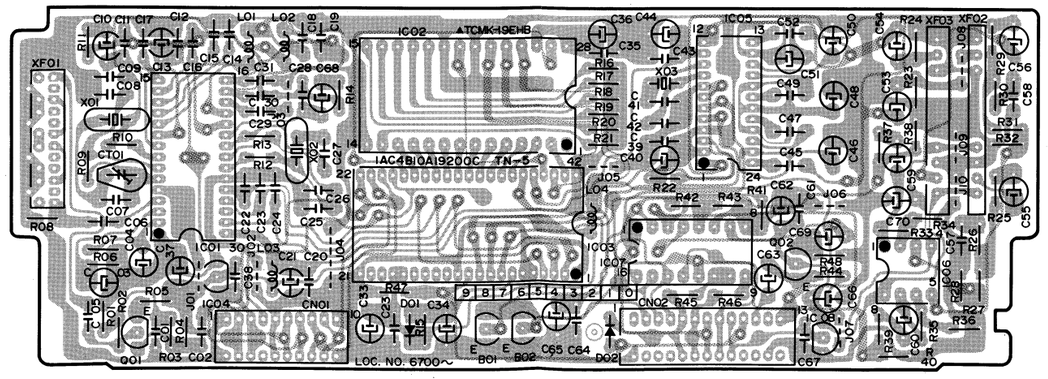




11

# DM-1 ANALOG PROCESS FOR DIGITAL MEMORY

**P**

**FM619 Q4**
**FM619 K4**

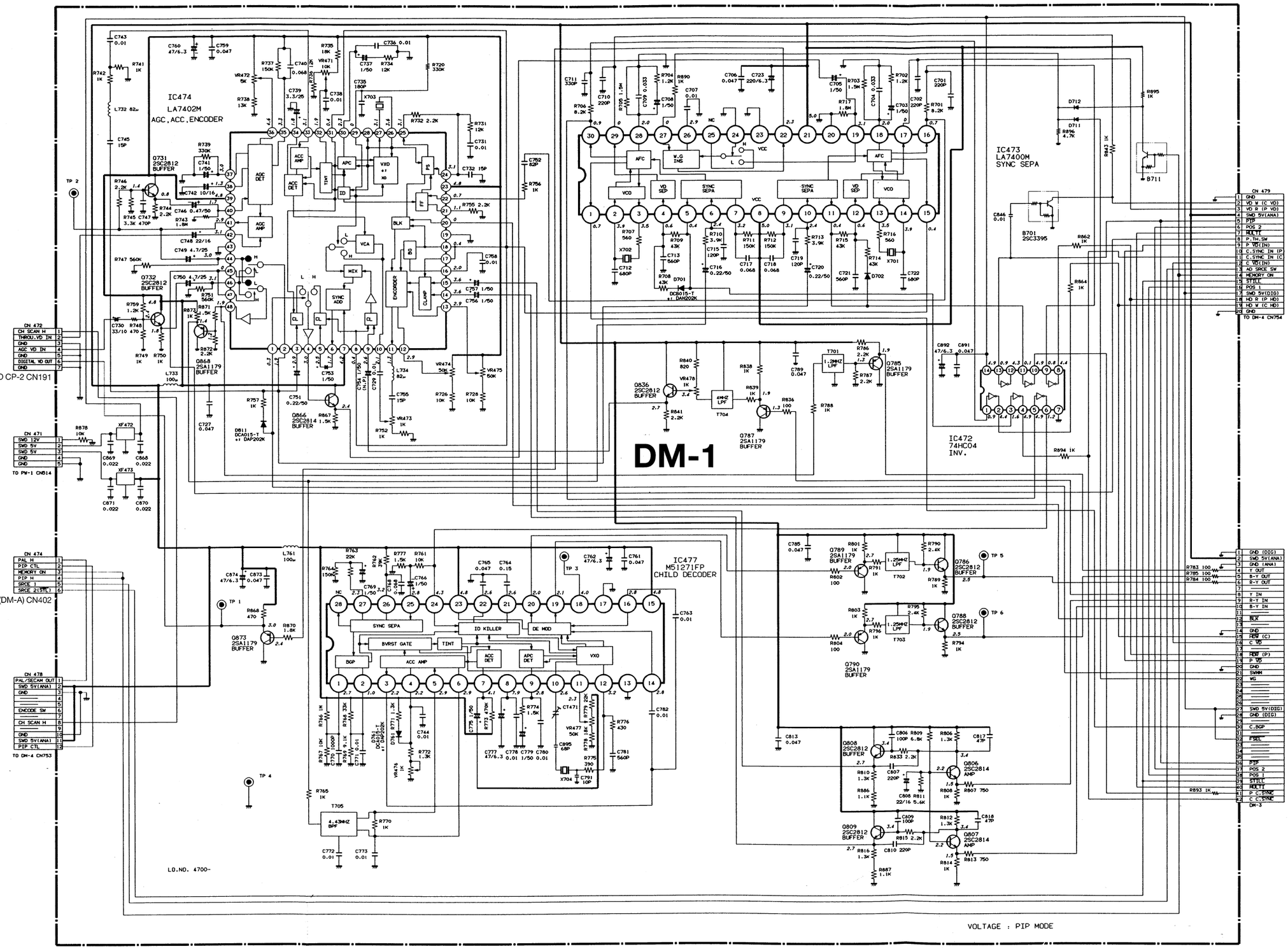

# DM-1 ANALOG PROCESS FOR DIGITAL MEMORY

**P**

**FM619 Q4**
**FM619 K4**

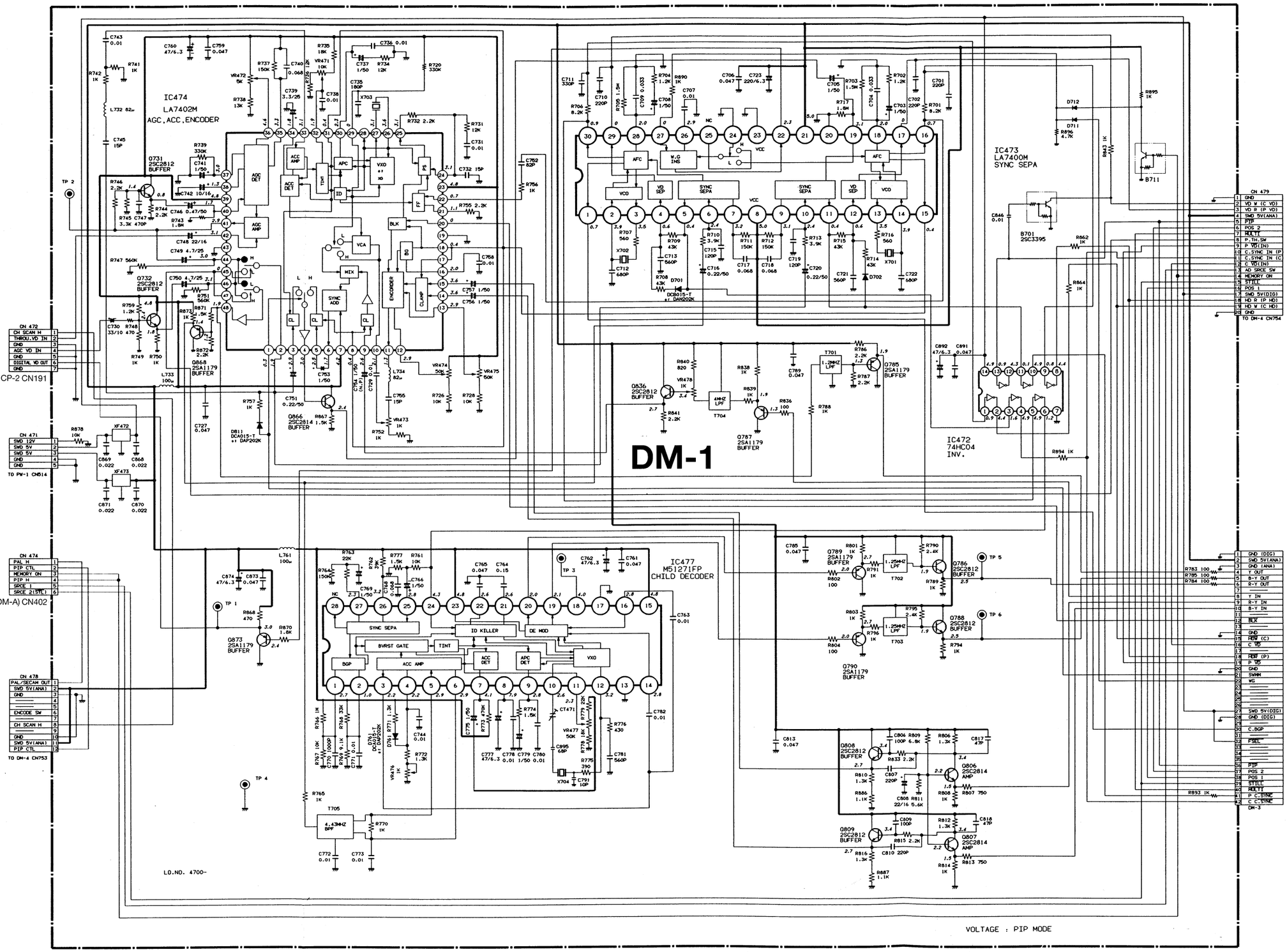

# DM-3 DIGITAL MEMORY

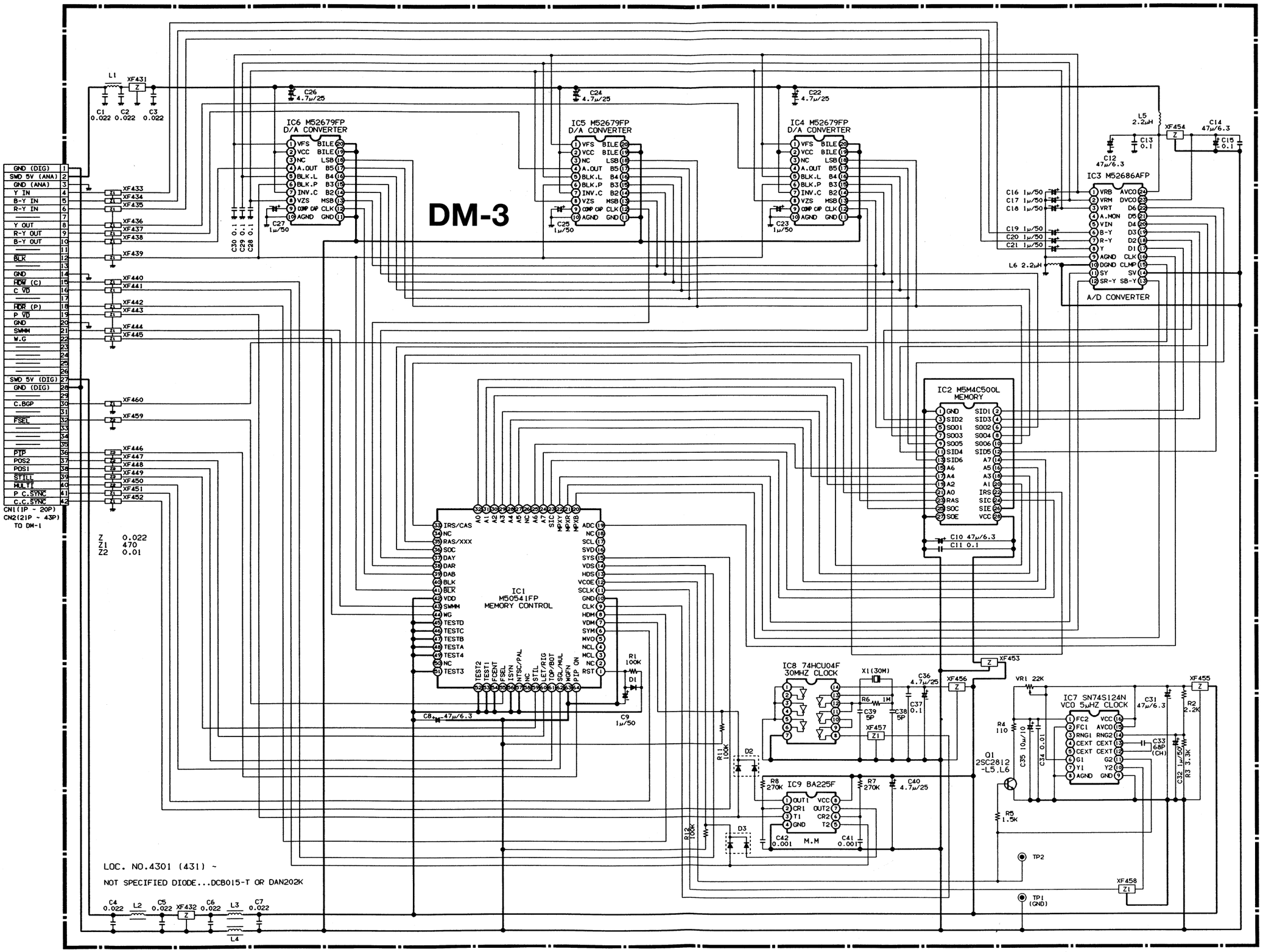

## DM-1 ANALOG PROCESS FOR DIGITAL MEMORY P.C.B.

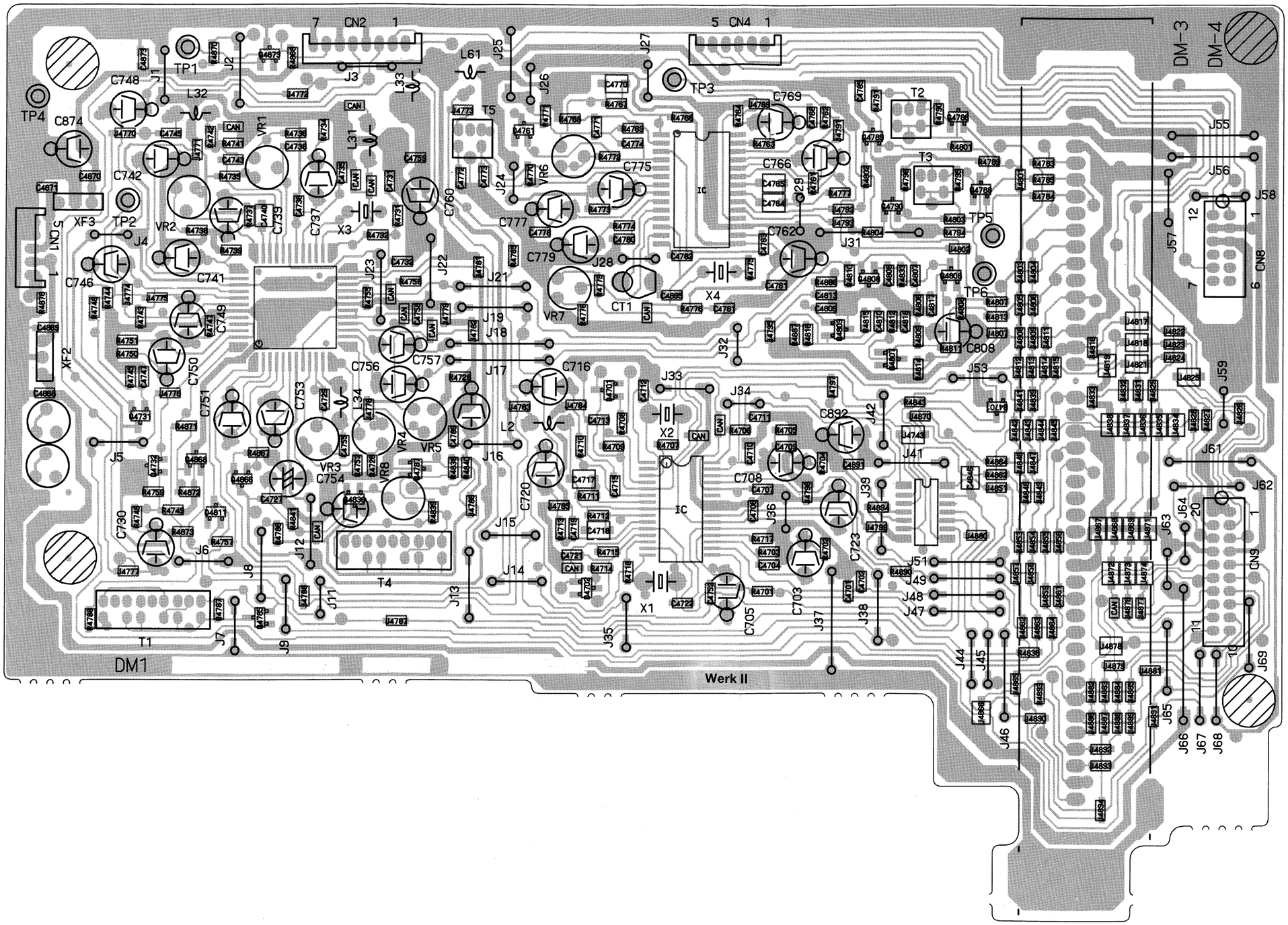


## DM-4 DIG

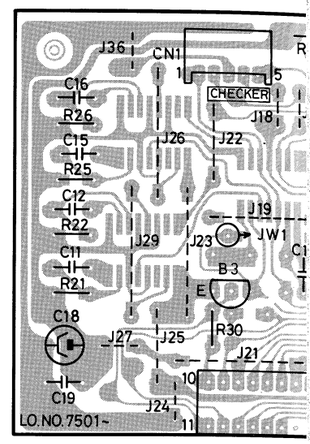


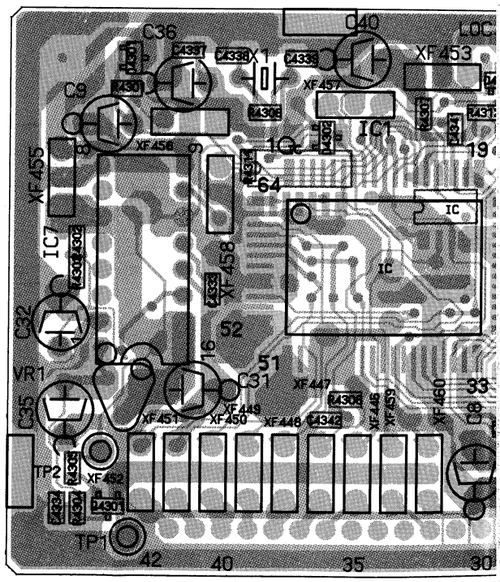


13

## DM-4 DIGITAL MEMORY CONTROL P.C.B.

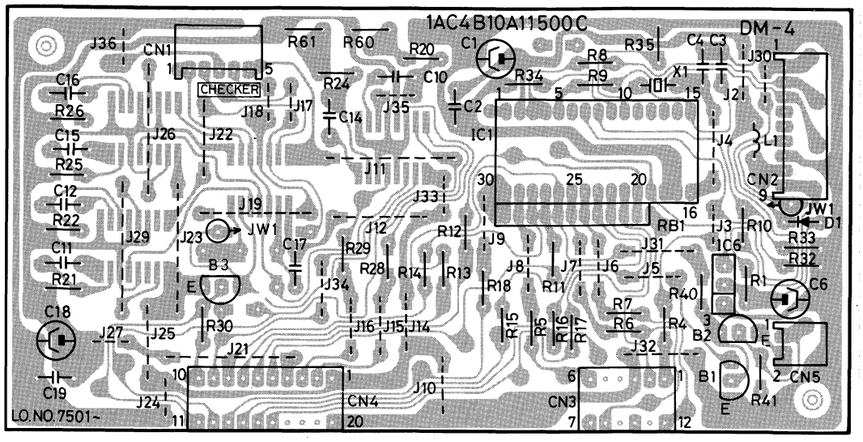


## DM-3 DIGITAL MEMORY P.C.B.

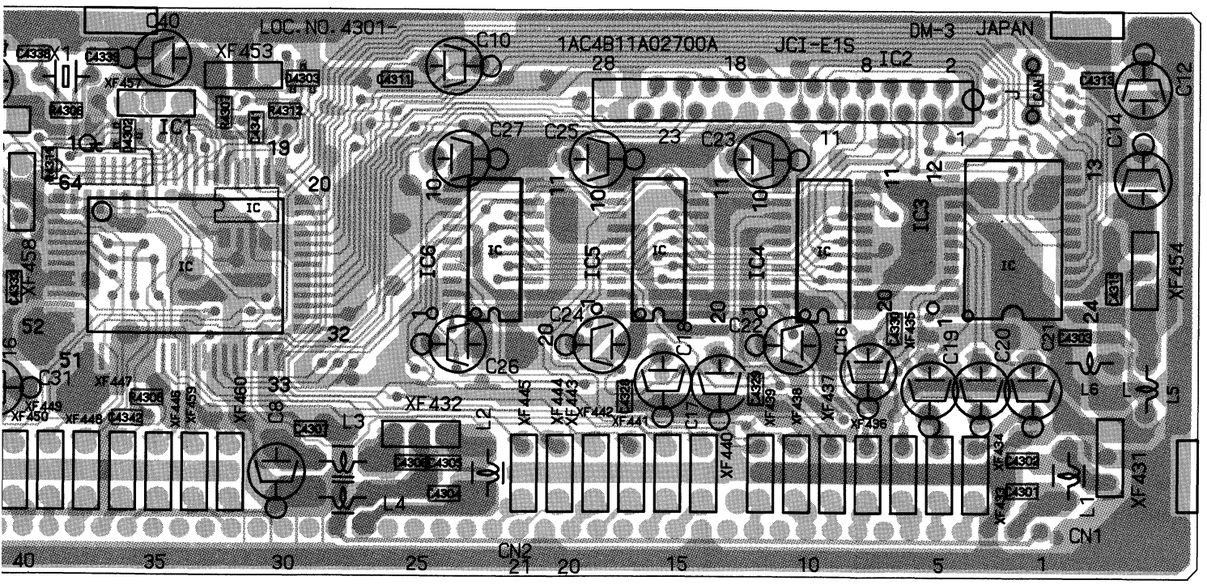


## COMPL. DM-4 DIGITAL MEMORY CONTROL CIRCUIT

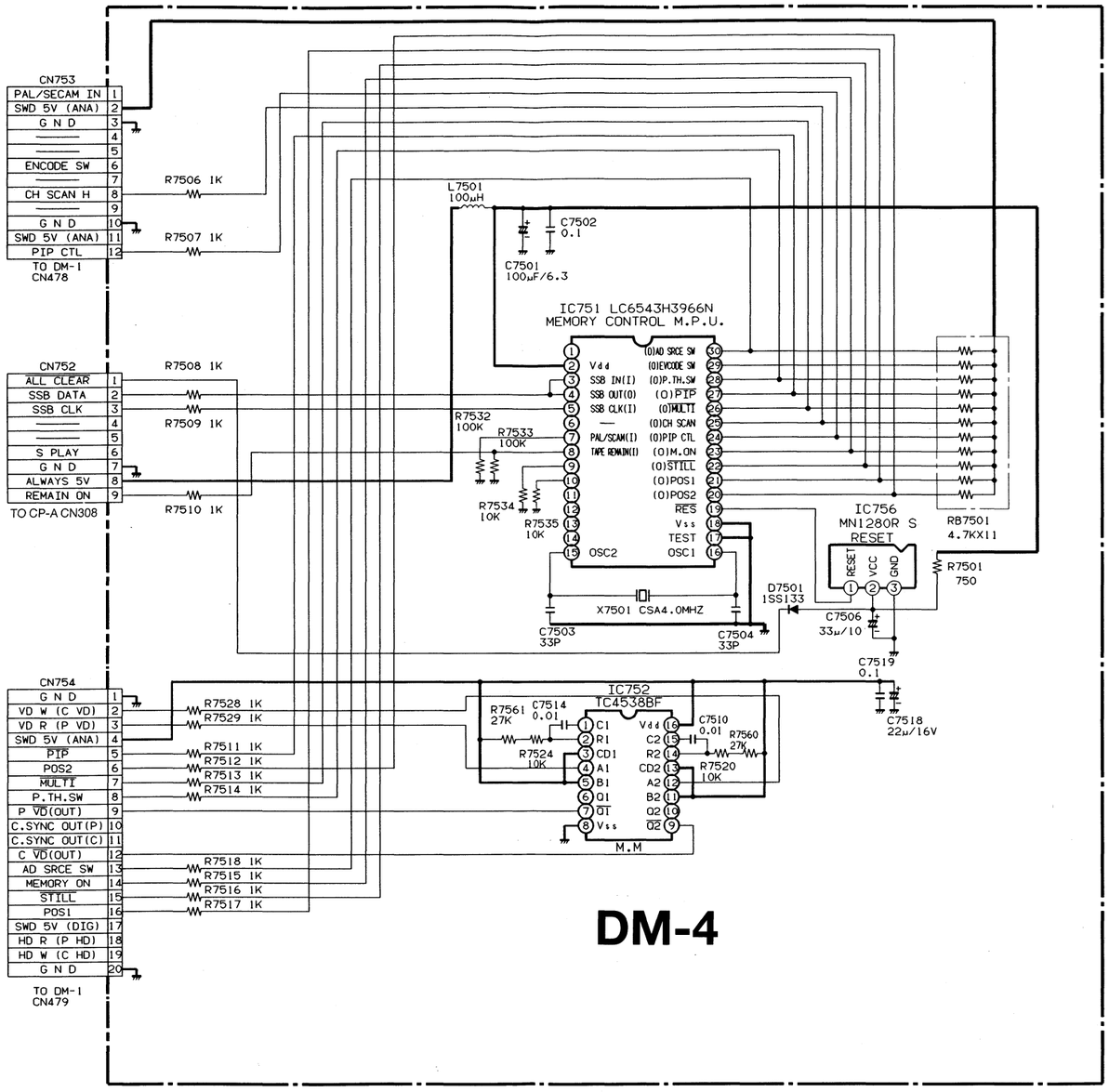


**DM-4**

**Q**
**FM619 Q4**
**FM619 K4**


13

## TN-1 ZF / IF

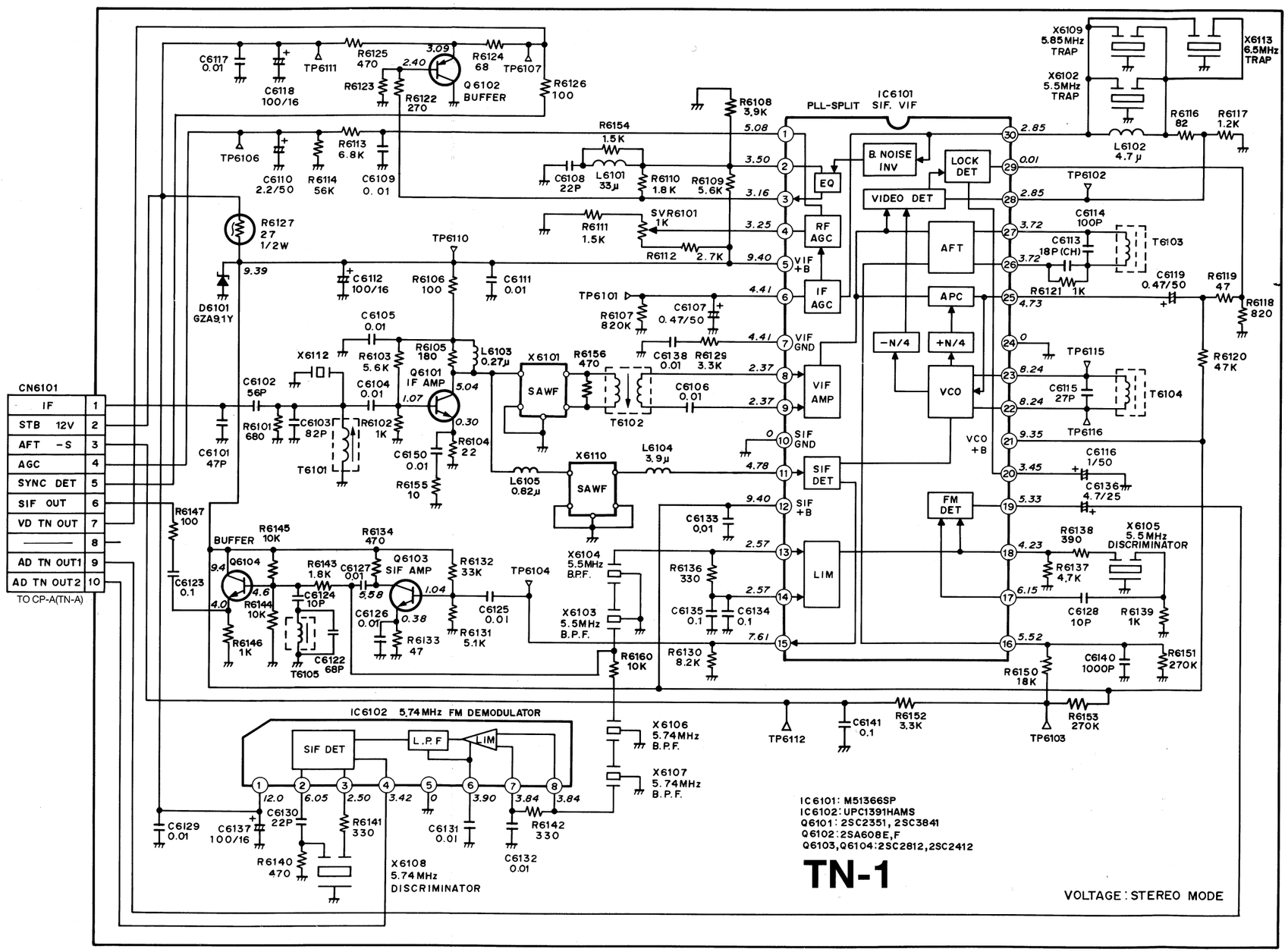


## TN-3 AUDIO STEREO DECOD

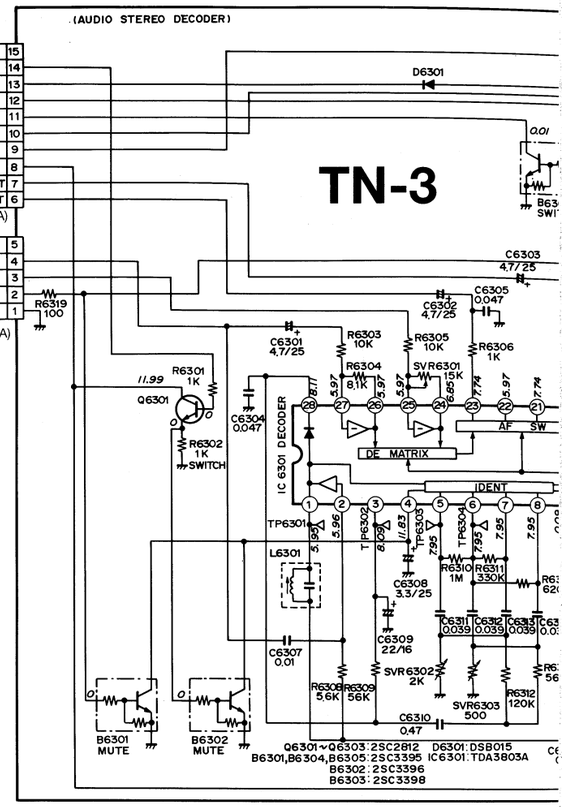


## TN-1 ZFC IF P

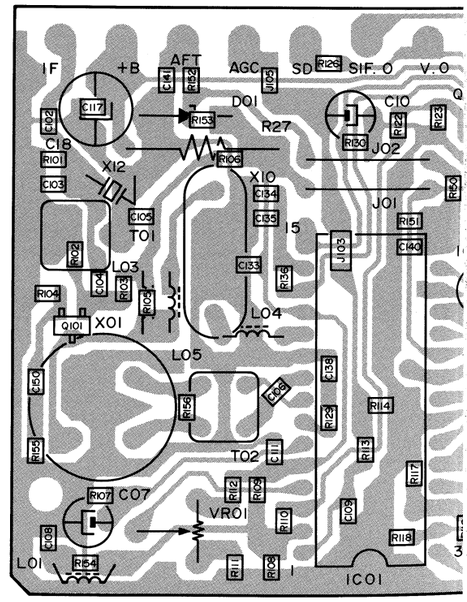

## AUDIO STEREO DECODER

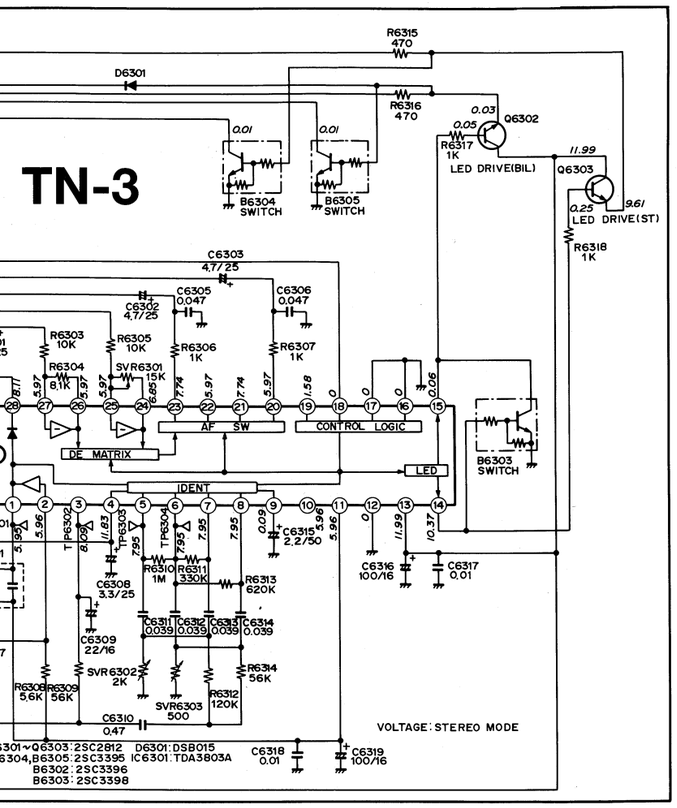


## TN-4 PLL PACK

| Pin NO. | NAME | DATA or FUNCTION |
|---|---|---|
| 1 | S 33V | 32.3V DC |
| 2 | UB | When 12V, tunings 21~49 CH |
| 3 | HB | When 12V, tunings $S_1$~$S_{10}$, 5~12 CH |
| 4 | LB | When 12V, tunings 2~4, X, Y, Z CH |
| 5 | SB | When 12V, tunings $S_{11}$~$S_{20}$ CH |
| 6 | 12V | 12.1V DC |
| 7 | S 5V | 4.8V DC |
| 8 | TU | 0~30V DC Tuning Voltage |
| 9 | DATA | 4.8Vp-p |
| 10 | CLK | Serial Data |
| 11 | CE | between Timer M.P.U. |

## TN-4 PLL

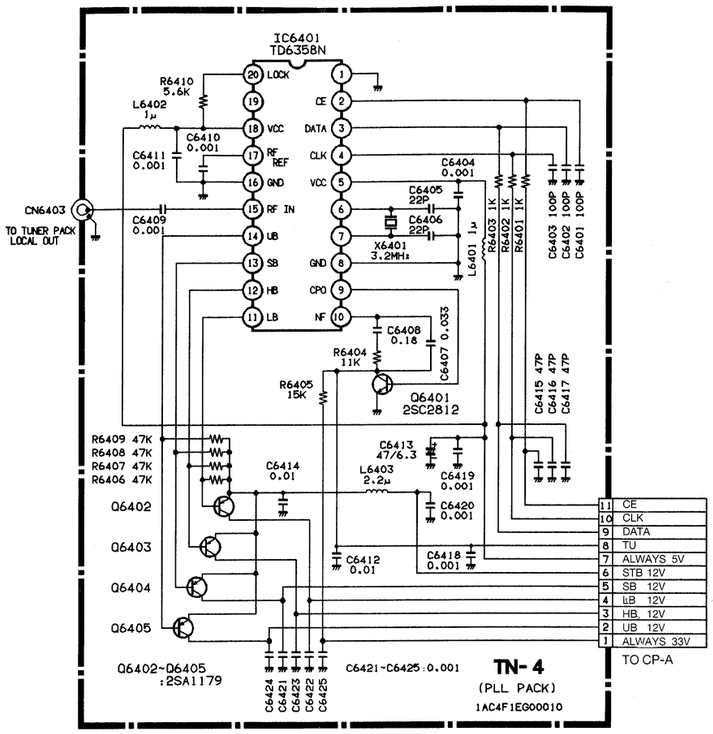


## TN-3 AUDIO STEREO DECODER P.C.B.

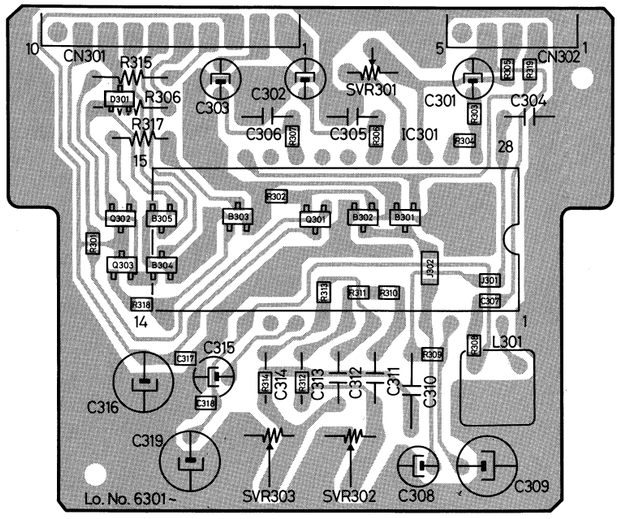


## TN-1 ZFC IF P.C.B.

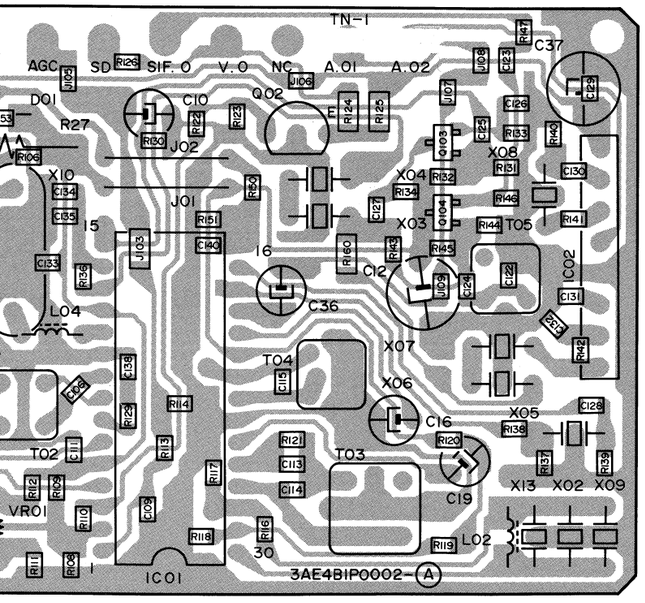


## TN-4 PLL P.C.B.

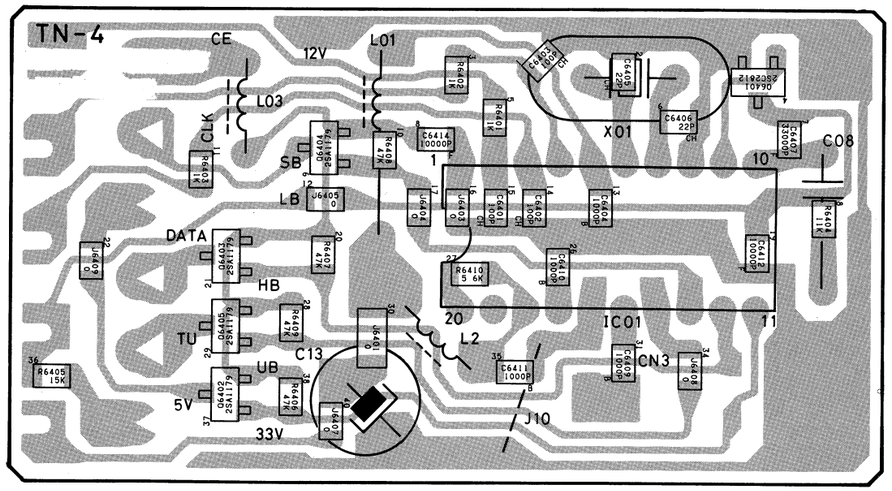

## IC305 HIC CIRCUIT DIAGRAM

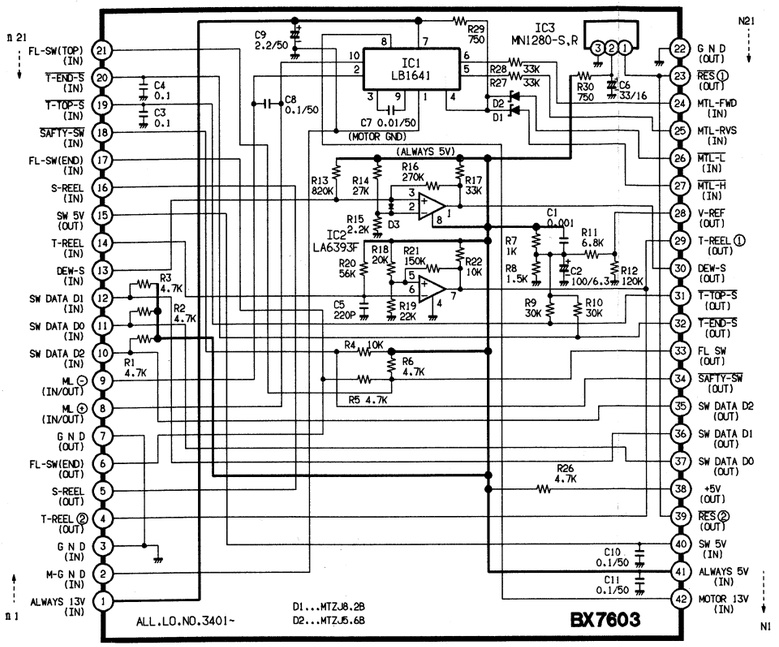


## IC351 (LC7418) DIGITAL SERVO IC. INTER BLOCK DIAGRAM

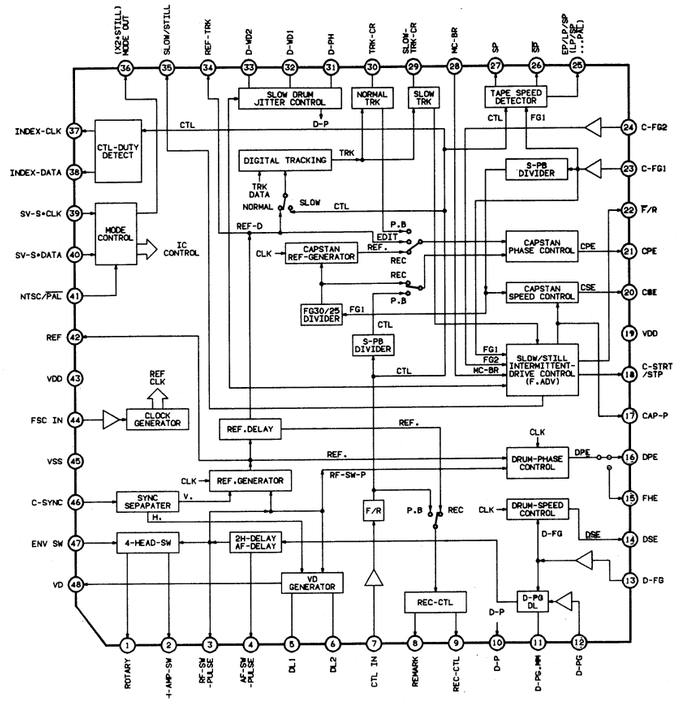


## CP-A (FM619 Q4) SYSTEM CONTROL

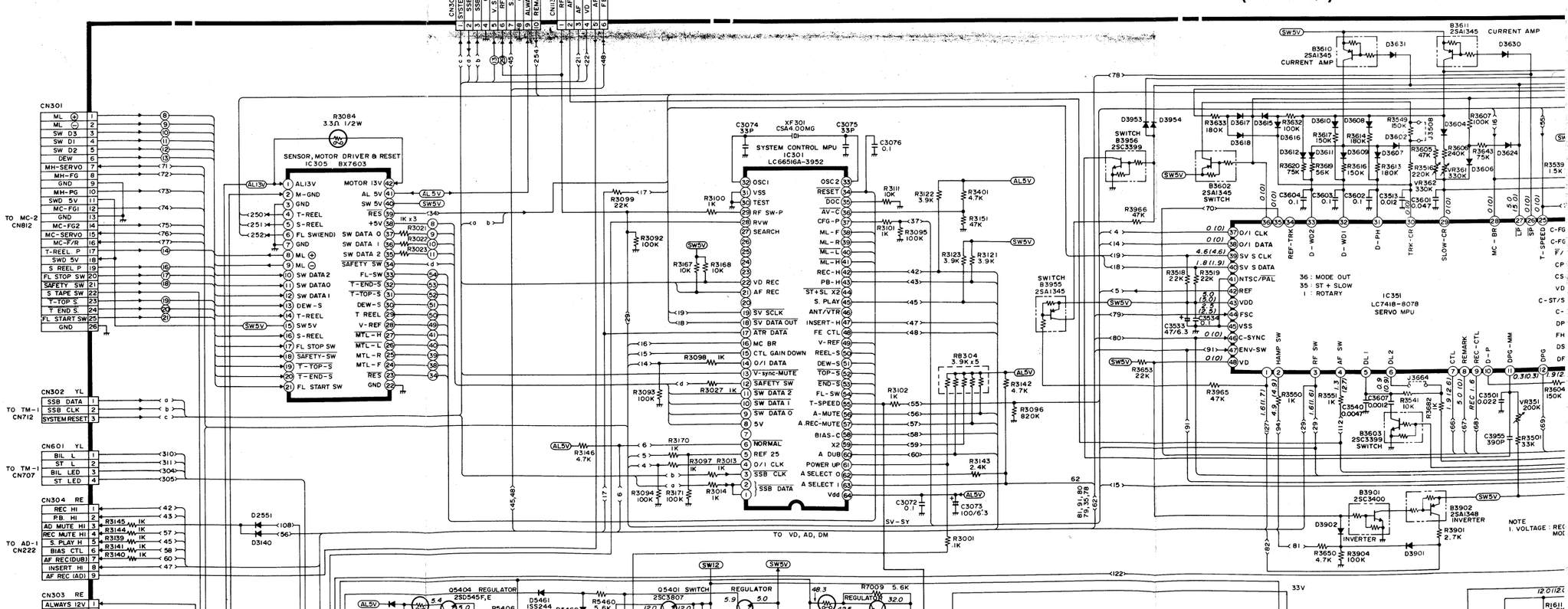

# M619 Q4) SYSTEM CONTROL

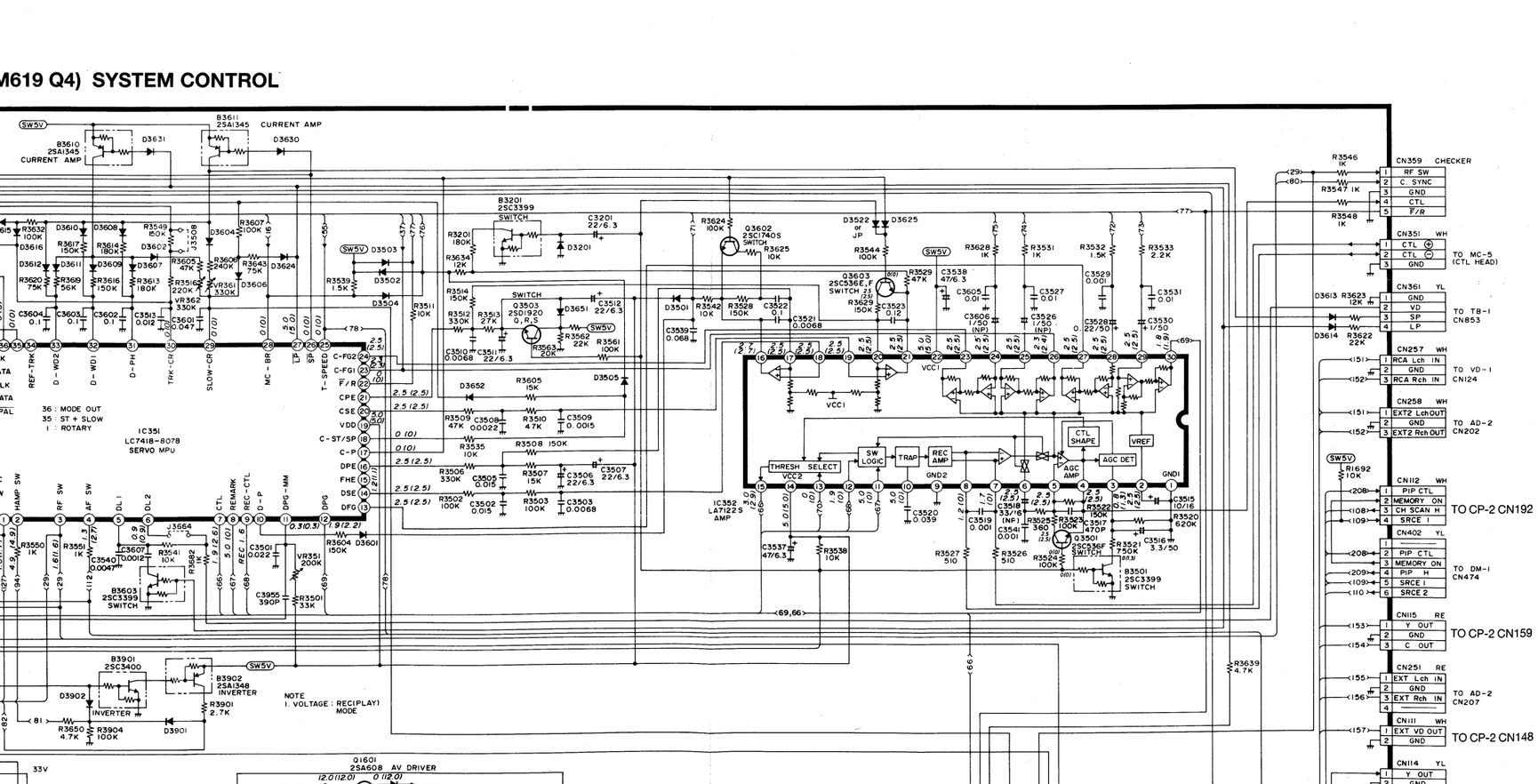

# CP-A

## CN301

| | | |
|---|---|---|
| ML + | 1 | → 8 |
| ML − | 2 | → 9 |
| SW D3 | 3 | → 11 |
| SW D1 | 4 | → 12 |
| SW D2 | 5 | → 13 |
| DEW | 6 | → 3 |
| MH-SERVO | 7 | → 71 |
| MH-FG | 8 | → 72 |
| GND | 9 | |
| MH-PG | 10 | → 73 |
| SWD 5V | 11 | |
| MC-FGI | 12 | → 74 |
| GND | 13 | |
| MC-FG2 | 14 | → 75 |
| MC-SERVO | 15 | → 76 |
| MC-F/R | 16 | → 77 |
| T-REEL P | 17 | → 14 |
| SWD 5V | 18 | |
| S REEL P | 19 | → 16 |
| FL STOP SW | 20 | → 17 |
| SAFETY SW | 21 | → 18 |
| S TAPE SW | 22 | |
| T-TOP S | 23 | → 19 |
| T END S | 24 | → 20 |
| FL START SW | 25 | → 21 |
| GND | 26 | |

TO MC-2 CN812

## CN302 YL

| | | |
|---|---|---|
| SSB DATA | 1 | → a |
| SSB CLK | 2 | → b |
| SYSTEM RESET | 3 | → c |

TO TM-1 CN712

## CN601 YL

| | | |
|---|---|---|
| BIL L | 1 | → 310 |
| ST L | 2 | → 311 |
| BIL LED | 3 | → 304 |
| ST LED | 4 | → 305 |

TO TM-1 CN707

## CN304 RE

| | | |
|---|---|---|
| REC HI | 1 | → 42 |
| P.B. HI | 2 | R3145 1K → 43 |
| AD MUTE HI | 3 | R3144 1K → 57 |
| REC MUTE HI | 4 | R3139 1K → 45 |
| S. PLAY H | 5 | R3141 1K → 58 |
| BIAS CTL | 6 | R3140 1K → 60 |
| AF REC(DUB) | 7 | → 47 |
| INSERT HI | 8 | |
| AF REC (AD) | 9 | |

TO AD-1 CN222

## CN303 RE

| | | |
|---|---|---|
| ALWAYS 12V | 1 | |
| GND | 2 | |
| ALWAYS 5V | 3 | AL5V |
| ST/L/R | 4 | → 62 |
| NORMAL | 5 | → 6 |
| P. UP | 6 | |

TO AD-2 CN210

## CN541 YL

| | | |
|---|---|---|
| ALWAYS 12V | 1 | |
| GND | 2 | |
| ALWAYS 5.8V | 3 | |
| GND (MOTOR) | 4 | |
| ALWAYS 13V | 5 | |
| ALWAYS 45V | 6 | |
| POWER UP | 7 | |
| GND (L.M.) | 8 | |
| UNREG -7.5V | 9 | |

TO PW-1 CN512

## CN701 WH

| | | |
|---|---|---|
| AV H | 1 | |
| SC H | 2 | |
| BAND1/CLK | 3 | |
| BAND2/DATA | 4 | |
| PWM/CE | 5 | |
| CLK | 6 | |
| DI | 7 | |
| CS | 8 | |
| | 9 | |

TO TM-1 CN711

## CN708 YL

| | | |
|---|---|---|
| PICTURE CONT | 1 | |
| SWD 5V | 2 | |
| GND | 3 | |

## CN102 YL

| | | |
|---|---|---|
| PICTURE CONT | 1 | |
| SWD 5V | 2 | |
| GND | 3 | |

TO VD-1 CN123

## CN702 YL

| | | |
|---|---|---|
| AD MUTE | 1 | → 312 |
| SYNC DET | 2 | → 318 |
| AFT-C | 3 | → 317 |
| ST BY 12V | 4 | |
| | 5 | |

TO TM-3 CN732

## CN542 YL

| | | |
|---|---|---|
| SWD 5V | 1 | |
| GND (L.M.) | 2 | |

TO TM-1 CN706

## CN101 WH

| | | |
|---|---|---|
| RF SW P | 1 | → 29 |
| RVS H | 2 | → 77 |
| ENV SELECT | 3 | → 91 |
| HA SW | 4 | → 94 |
| S PLAY H | 5 | |

TO VP-1 CN182

## CN105 YL

| | | |
|---|---|---|
| ALWAYS 45V | 1 | |
| ALWAYS 12V | 2 | |
| SWD 12V | 3 | |
| ALWAYS 5.8V | 4 | |
| GND | 5 | |

TO CP-2 CN145

## CN103 WH

| | | |
|---|---|---|
| CVBS OUT H | 1 | |
| S TAPE SW | 2 | |
| FSC | 3 | → 79 |
| GND | 4 | |
| | 5 | |
| | 6 | → 45 |

TO VD-1 CN121

## R3084 3.3Ω 1/2W

## SENSOR, MOTOR DRIVER & RESET IC305 BX7603

| | | | |
|---|---|---|---|
| AL13V | 1 | MOTOR 13V | 42 |
| M-GND | 2 | AL 5V | 41 → AL 5V |
| GND | 3 | SW 5V | 40 → SW5V |
| T-REEL | 4 | RES | 39 → 34 |
| S-REEL | 5 | +5V | 38 IK x3 |
| FL SW(END) | 6 | SW DATA 0 | 37 → R3027 9 |
| GND | 7 | SW DATA 1 | 36 → R3023 10 |
| ML + | 8 | SW DATA 2 | 35 → R3023 11 |
| ML − | 9 | SAFETY SW | 34 → d |
| SW DATA2 | 10 | FL-SW | 33 → 54 |
| SW DATA0 | 11 | T-END-S | 32 → 53 |
| SW DATA1 | 12 | T-TOP-S | 31 → 52 |
| DEW-S | 13 | DEW-S | 30 → 51 |
| T-REEL | 14 | T REEL | 29 → 50 |
| SW 5V | 15 | V-REF | 28 → 49 |
| S-REEL | 16 | MTL-H | 27 → 41 |
| FL STOP SW | 17 | MTL-L | 26 → 40 |
| SAFETY-SW | 18 | MTL-R | 25 → 39 |
| T-TOP-S | 19 | MTL-F | 24 → 38 |
| T-END-S | 20 | RES | 23 → 34 |
| FL START SW | 21 | GND | 22 |

AL13V

## SYSTEM CONTROL MPU IC301 LC66516A-3952

XF301 CSA4.00MG; C3074 33P; C3075 33P; C3076 0.1

| | | | |
|---|---|---|---|
| OSCI | 32 | OSC2 | 33 |
| VSS | 31 | RESET | 34 |
| TEST | 30 | DOC | 35 |
| RF SW-P | 29 | AV-C | 36 |
| RVW | 28 | CFG-P | 37 |
| SEARCH | 27 | ML-F | 38 |
| | 26 | ML-R | 39 |
| | 25 | ML-L | 40 |
| | 24 | ML-H | 41 |
| | 23 | REC-H | 42 |
| VD REC | 22 | PB-H | 43 |
| AF REC | 21 | ST+SL X2 | 44 |
| | 20 | S. PLAY | 45 |
| SV SCLK | 19 | ANT/VTR | 46 |
| SV DATA OUT | 18 | INSERT-H | 47 |
| ATR DATA | 17 | FE CTL | 48 |
| MC BR | 16 | V-REF | 49 |
| CTL GAIN DOWN | 15 | REEL-S | 50 |
| O/I DATA | 14 | DEW-S | 51 |
| V-sync-MUTE | 13 | TOP-S | 52 |
| SAFETY SW | 12 | END-S | 53 |
| SW DATA 2 | 11 | FL-SW | 54 |
| SW DATA 1 | 10 | T-SPEED | 55 |
| SW DATA 0 | 9 | A-MUTE | 56 |
| 5V | 8 | A.REC-MUTE | 57 |
| NORMAL | 7 | BIAS-C | 58 |
| REF 25 | 6 | X2 | 59 |
| O/I CLK | 5 | A DUB | 60 |
| SSB CLK | 4 | POWER UP | 61 |
| SSB DATA | 3 | A SELECT 0 | 62 |
| | 2 | A SELECT 1 | 63 |
| | 1 | Vdd | 64 |

TO VD, AD, DM

## MEMORY IC701 M6M80021P

| | | | |
|---|---|---|---|
| CS | 1 | VDD | 8 |
| CLK | 2 | | 7 |
| DI | 3 | RES | 6 |
| DO | 4 | GND | 5 |

C7001 0.01

## IC1C1 LC7418-8078 SERVO MPU

36 : MODE OUT
35 : ST + SLOW
1 : ROTARY

| | | | |
|---|---|---|---|
| | 1 | HAMP SW | |
| | 2 | RF SW | |
| | 3 | AF SW | |
| | 4 | DL1 | |
| | 5 | DL2 | |
| | 6 | CTL | |
| | 7 | REMARK | |
| | 8 | REC-CTL | |
| | 9 | REC-P | |
| | 10 | DPG-MM | |
| | 11 | | |
| | 12 | | |
| | 13 | | |
| | 14 | | |
| | 15 | | |
| | 16 | | |
| | 17 | | |
| | 18 | | |
| | 19 | | |
| | 20 | | |
| | 21 | | |
| | 22 | | |
| | 23 | | |
| | 24 | | |
| | 25 | | |
| | 26 | | |
| | 27 | | |
| | 28 | | |
| | 29 | | |
| | 30 | | |
| | 31 | D-WD2 | |
| | 32 | D-WD1 | |
| | 33 | D-PH | |
| | 34 | TRK-CR | |
| | 35 | SLOW-CR | |
| | 36 | MC-BR | |
| | 37 | O/I CLK | |
| | 38 | O/I DATA | |
| | 39 | SV S CLK | |
| | 40 | SV S DATA | |
| | 41 | NTSC/PAL | |
| | 42 | REF | |
| | 43 | VDD | |
| | 44 | FSC | |
| | 45 | VSS | |
| | 46 | C-SYNC | |
| | 47 | ENV-SW | |
| | 48 | VD | |

## IC7C1 LC7418-8078 SERVO MPU

36 : MODE OUT
35 : ST + SLOW
1 : ROTARY

| | | | |
|---|---|---|---|
| | 1 | HAMP SW | |
| | 2 | RF SW | |
| | 3 | AF SW | |
| | 4 | DL1 | |
| | 5 | DL2 | |
| | 6 | CTL | |
| | 7 | REMARK | |
| | 8 | REC-CTL | |
| | 9 | REC-P | |
| | 10 | DPG-MM | |
| | 11 | | |
| | 12 | | |
| | 13 | | |
| | 14 | | |
| | 15 | | |
| | 16 | | |
| | 17 | | |
| | 18 | | |
| | 19 | | |
| | 20 | | |
| | 21 | | |
| | 22 | | |
| | 23 | | |
| | 24 | | |
| | 25 | | |
| | 26 | | |
| | 27 | | |
| | 28 | | |
| | 29 | | |
| | 30 | | |
| | 31 | D-WD2 | |
| | 32 | D-WD1 | |
| | 33 | D-PH | |
| | 34 | TRK-CR | |
| | 35 | SLOW-CR | |
| | 36 | MC-BR | |
| | 37 | O/I CLK | |
| | 38 | O/I DATA | |
| | 39 | SV S CLK | |
| | 40 | SV S DATA | |
| | 41 | NTSC/PAL | |
| | 42 | REF | |
| | 43 | VDD | |
| | 44 | FSC | |
| | 45 | VSS | |
| | 46 | C-SYNC | |
| | 47 | ENV-SW | |
| | 48 | VD | |

## RB304 3.9K x5

## SWITCH B1691 2SC3399

R1691 10K

## SWITCH B3955 2SA1345

## SWITCH B3956 2SC3399

## B3602 2SA1345 SWITCH

## B3603 2SC3399 SWITCH

## B3610 2SA1345 CURRENT AMP

## B3901 2SC3400 INVERTER

## B3902 2SA1348 INVERTER

## Q5404 REGULATOR 2SD545F,E

## Q5401 SWITCH REGULATOR 2SC3807

## Q5403 2SA984 KE,KF SWITCH

## Q5406 2SC2960 E,F,G SWITCH

## Q7009 REGULATOR

## Q7002 2SA984 KE,KF

## Q7001 IS5631

## IC703 μPC574J (IL5631) REGULATOR

## Q1641 2SC536 BUFFER

## Q1642 2SC536 BUFFER

## Q1643 2SA608F,G S CHROMA OUT DRIVER

## Q1644 2SA608F,G AV CHROMA OUT DRIVER

## Q1645 2SC536 AV CHROMA OUT CONTROL

## Q1632 2SA608F,G BUFFER

## Q1631 2SA608F,G BUFFER

## D3140 D2551

## D5404 MTZ5.6B

## D5402 MTZ5.1A

## D5401 IS5244

## D5403 IS5244

## D5460 IS5244

## D5461 IS5244

## D7002 MTZ6.8C

## D660I D5K10C

## D3903

## D1651 D1652

## D2553 D2552

## D6070 D6071

## S6052

## J6068 J6073

## JW352

## TO CP-2 CN146

## TO CP-2 CN147

## TO CP-2 CN155

## TO AD-2 CN211

## TO AD-2 CN212

## TO VD-1 CN262

## RF CONVERTER

## TN-1 TUNER IF

## TO VD-1 CN122

## TO AD-2 CN211

## TO CP-2 CN145

## TO VD-1 CN121

## TO TM-1 CN711

## TO TM-3 CN732

## TO TM-1 CN706

## TO VP-1 CN182

## TO TM-1 CN712

## TO TM-1 CN707

## TO AD-1 CN222

## TO AD-2 CN210

## TO PW-1 CN512

## TO MC-2 CN812

AL5V; SW5V; SW12; 33V; SWD 5V; 5V-SY

# K

**FM619 Q4**
**FM619 K4**

## TB-1

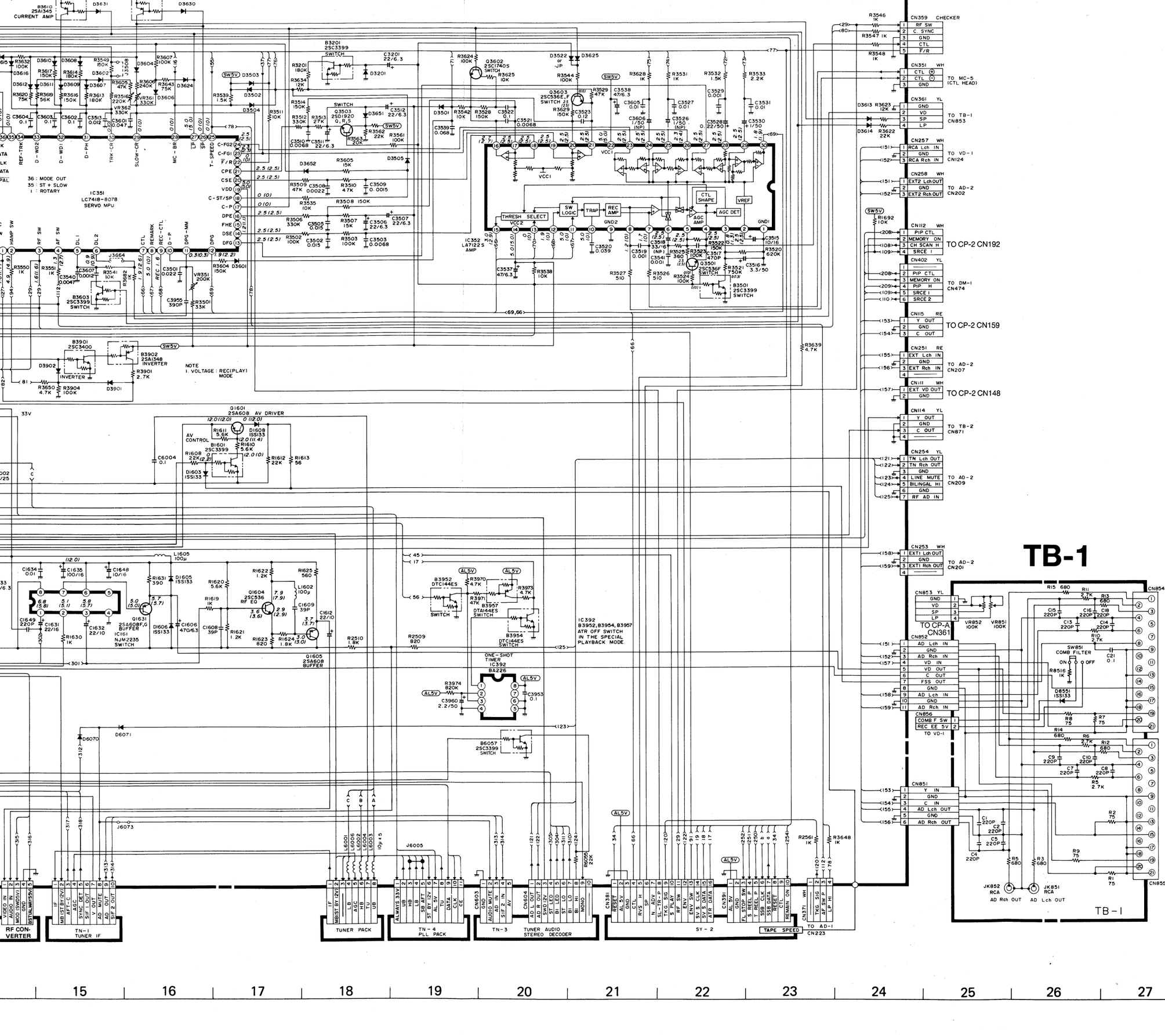

## IC305 HIC CIRCUIT DIAGRAM

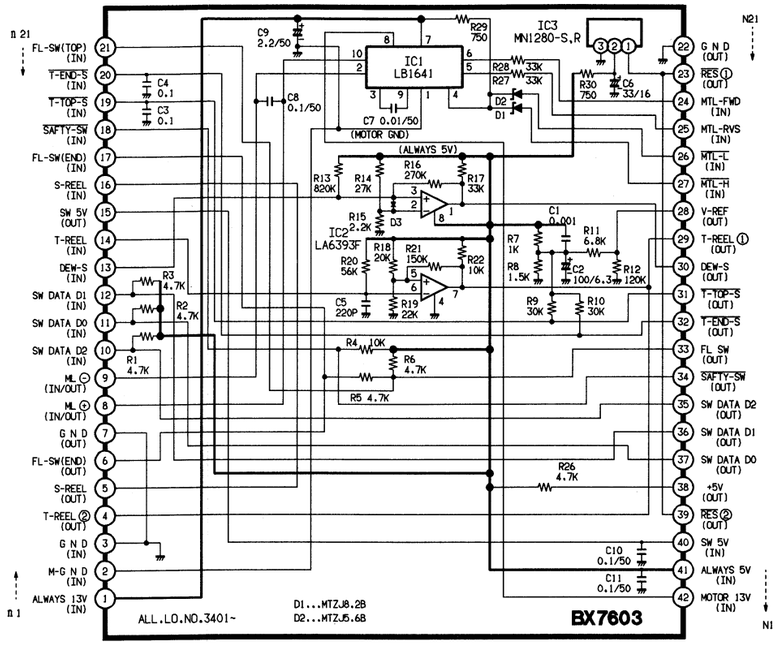


## IC351 (LC7418) DIGITAL SERVO IC. INTER BLOCK DIAGRAM

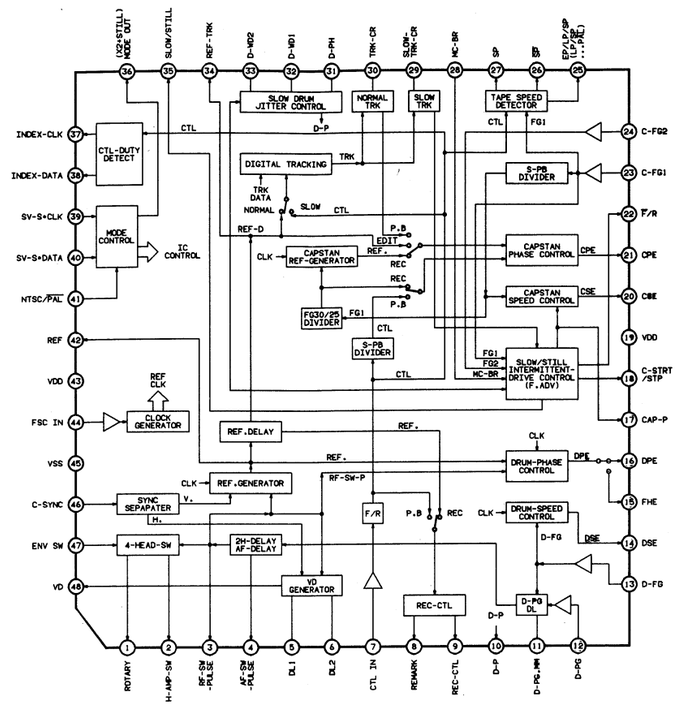


## CP-A MAIN (FM619 K4) SYSTEM CONT

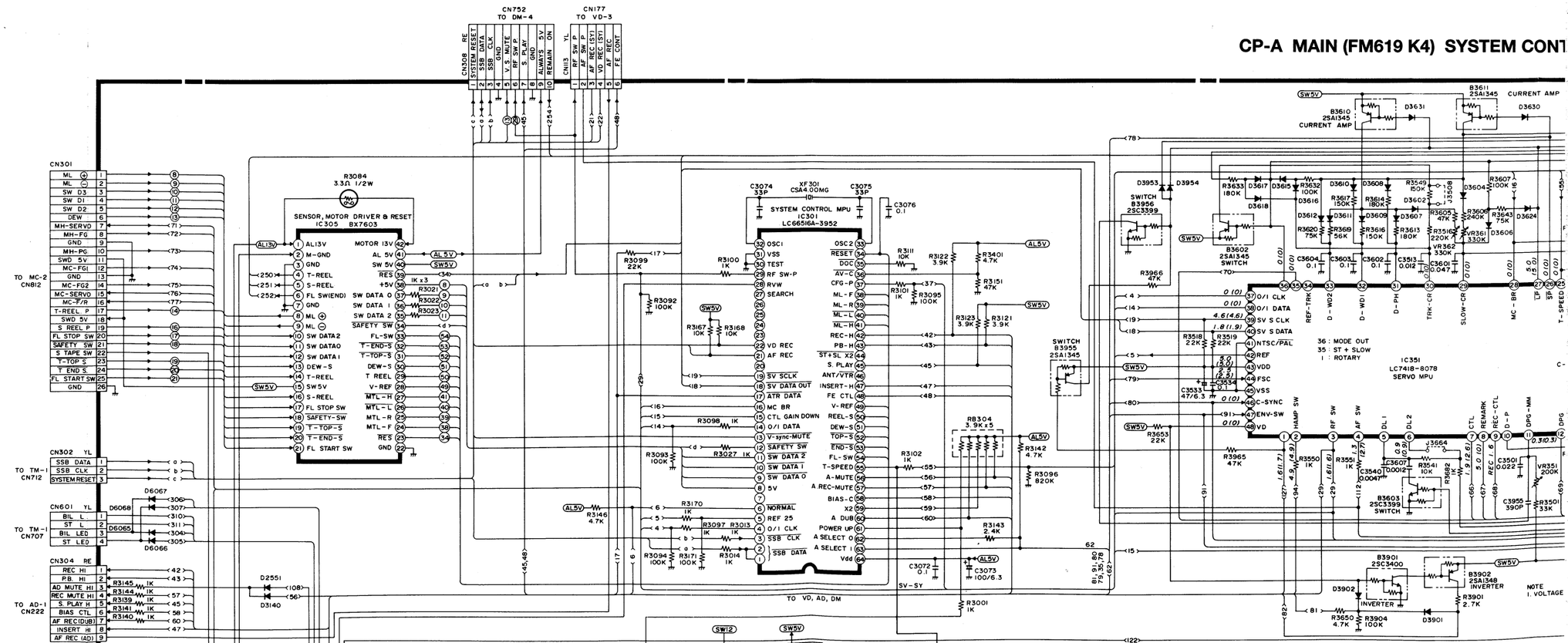

# CP-A MAIN (FM619 K4) SYSTEM CONTROL

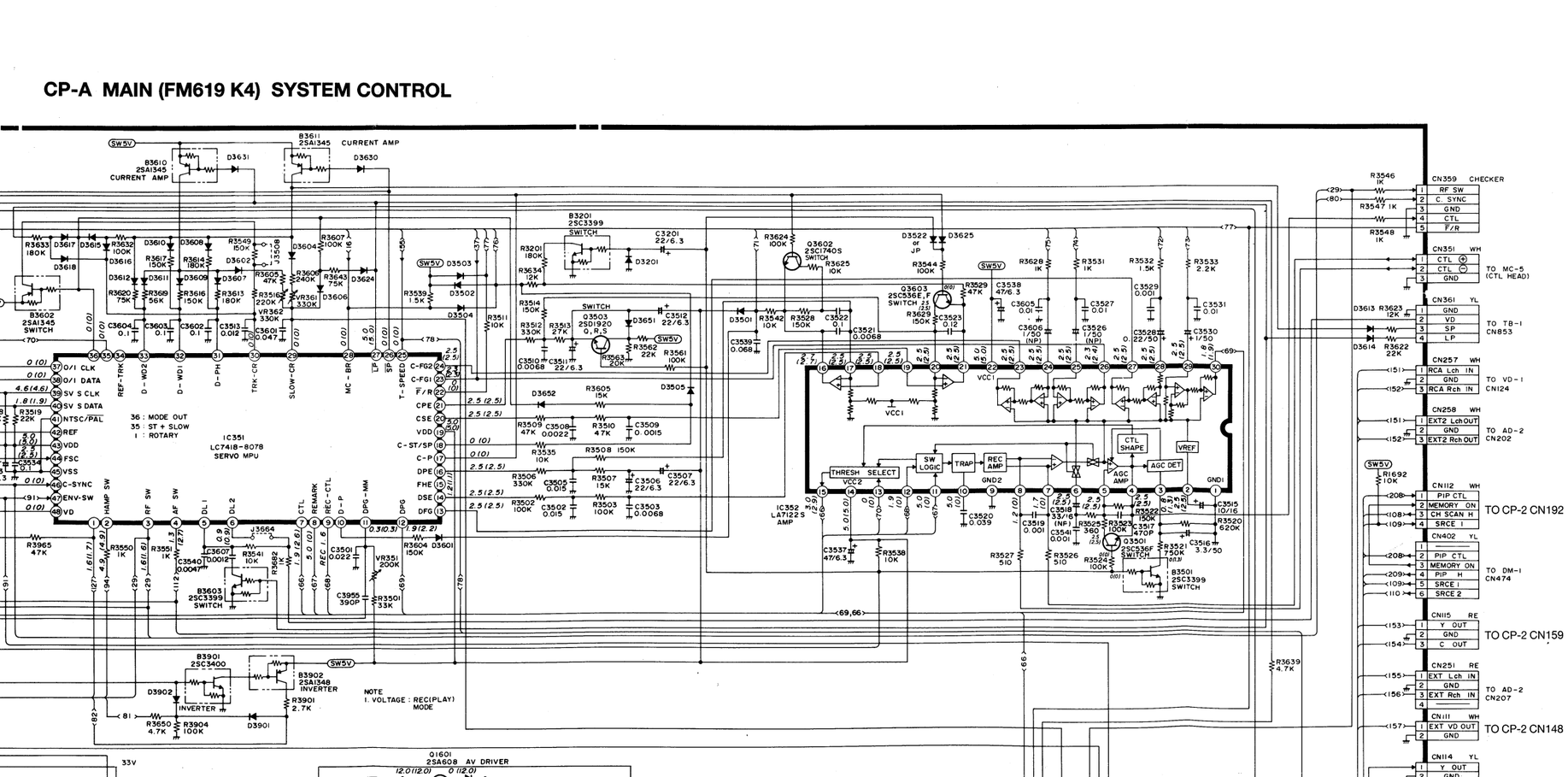

**L**

**FM619 Q4**
**FM619 K4**

CN301
ML ⊕ 1
ML ⊖ 2
SW D3 3
SW D1 4
SW D2 5
DEW 6
MH-SERVO 7
MH-FG 8
GND 9
MH-PG 10
SWD 5V 11
MC-FG1 12
GND 13
MC-FG2 14
MC-SERVO 15
MC-F/R 16
T-REEL P 17
SWD 5V 18
S REEL P 19
FL STOP SW 20
SAFETY SW 21
S TAPE SW 22
T-TOP S 23
T END S 24
FL START SW 25
GND 26
TO MC-2 CN812

R3084 3.3Ω 1/2W

SENSOR, MOTOR DRIVER & RESET IC305 BX7603
1 AL13V
2 M-GND
3 GND
4 T-REEL
5 S-REEL
6 FL SW(END)
7 GND
8 ML ⊕
9 ML ⊖
10 SW DATA2
11 SW DATAO
12 SW DATA I
13 DEW-S
14 T-REEL
15 SW5V
16 S-REEL
17 FL STOP SW
18 SAFETY-SW
19 T-TOP-S
20 T-END-S
21 FL START SW
MOTOR I3V 42
AL 5V 41
SW 5V 40
RES 39
IK x3 38
SW DATA O 37
SW DATA I 36
SW DATA 2 35
SAFETY SW 34
FL-SW 33
T-END-S 32
T-TOP-S 31
DEW-S 30
T REEL 29
V-REF 28
MTL-H 27
MTL-L 26
MTL-R 25
MTL-F 24
RES 23
GND 22

CN302 YL
SSB DATA 1
SSB CLK 2
SYSTEMRESET 3
TO TM-1 CN712

CN601 YL
BIL L 1
ST L 2
BIL LED 3
ST LED 4
TO TM-1 CN707
D6068 D6065 D6067 D6066

CN304 RE
REC HI 1
P.B. HI 2
AD MUTE HI 3
REC MUTE HI 4
S. PLAY H 5
BIAS CTL 6
AF REC(DUB) 7
INSERT HI 8
AF REC (AD) 9
TO AD-1 CN222
R3145 1K
R3144 1K
R3139 1K
R3141 1K
R3140 1K
D2551
D3140

CN303 RE
ALWAYS 12V 1
GND 2
ALWAYS 5V 3
ST/L/R 4
NORMAL 5
P. UP 6
TO AD-2 CN210
AL5V

CN541 YL
ALWAYS 12V 1
GND 2
ALWAYS 5.8V 3
GND (MOTOR) 4
ALWAYS 13V 5
ALWAYS 45V 6
POWER UP 7
GND (L.M.) 8
UNREG -7.5V 9
TO PW-1 CN512

CN701 WH
AV H 1
SC H 2
BAND1/CLK 3
BAND2/DATA 4
PWM/CE 5
CLK 6
DI 7
CS 8
9
TO TM-1 CN711

CN708 YL
PICTURE CONT 1
SWD 5V 2
GND 3

CN102 YL
PICTURE CONT 1
SWD 5V 2
GND 3
TO VD-1 CN123

CN702 YL
AD MUTE 1
SYNC DET 2
AFT-C 3
ST BY 12V 4
AFT 5
TO TM-3 CN732

CN542 YL
SWD 5V 1
GND (L.M.) 2
TO TM-1 CN706

CN101 WH
RF SW P 1
RVS H 2
ENV SELECT 3
HA SW 4
S.PLAY H 5
TO VP-1 CN182

CN105 YL
ALWAYS 48V 1
ALWAYS 12V 2
SWD 12V 3
ALWAYS 5.8V 4
GND 5
TO CP-2 CN145

CN103 WH
CVBS OUT H 1
S TAPE SW 2
FSC 3
GND 4
5
6
TO VD-1 CN121

C3074 33P
XF301 CSA4.00MG
C3075 33P
SYSTEM CONTROL MPU IC301 LC66516A-3952
C3076 0.1

32 OSC1
31 VSS
30 TEST
29 RF SW-P
28 RVW
27 SEARCH
26
25
24
23 VD REC
22 AF REC
21
20
19 SV SCLK
18 SV DATA OUT
17 ATR DATA
16 MC BR
15 CTL GAIN DOWN
14 O/I DATA
13 V-sync-MUTE
12 SAFETY SW
11 SW DATA 2
10 SW DATA 1
9 SW DATA 0
8 5V
7
6 NORMAL
5 REF 25
4 O/I CLK
3 SSB CLK
2 SSB DATA
1
OSC2 33
RESET 34
DOC 35
AV-C 36
CFG-P 37
ML-F 38
ML-R 39
ML-L 40
ML-H 41
REC-H 42
PB-H 43
ST+SL X2 44
S. PLAY 45
ANT/VTR 46
INSERT-H 47
FE CTL 48
V-REF 49
REEL-S 50
DEW-S 51
TOP-S 52
END-S 53
FL-SW 54
T-SPEED 55
A-MUTE 56
A.REC-MUTE 57
BIAS-C 58
X2 59
A DUB 60
POWER UP 61
A SELECT 0 62
A SELECT 1 63
Vdd 64

R3099 22K
R3092 100K
R3100 1K
R3111 10K
R3101 1K
R3095 100K
R3122 3.9K
R3401 4.7K
R3151 47K
R3123 3.9K
R3121 3.9K
R3167 10K
R3168 10K
R3098 1K
R3093 100K
R3027 1K
R3170 1K
R3097 1K
R3013 1K
R3094 100K
R3171 100K
R3014 1K
R3146 4.7K
R3102 1K
R3142 4.7K
R3096 820K
R3143 2.4K
R3001 1K
RB304 3.9K x 5
C3072 0.1
C3073 100/6.3
SV-SY
TO VD, AD, DM

SWITCH 2SA1345 (2SC3399)
B3610 2SA1345 CURRENT AMP
B3611 2SA1345 CURRENT AMP
D3631
D3953 D3954
B3956 2SC3399
B3602 2SA1345 SWITCH
D3617 D3615 D3618 D3616 D3612 D3610 D3608 D3611 D3609 D3607 D3602 D3604 D3606
R3633 180K
R3632 100K
R3549 150K
R3607 100K
R3617 150K
R3614 180K
R3605 47K
R3608 240K
R3543 75K
R3620 75K
R3369 56K
R3616 150K
R3613 180K
R3615 220K
VR361 330K
VR362 330K
R3966 47K
C3604 0.1
C3603 0.1
C3602 0.1
C3513 0.012
C3601 0.047
J3508
J3509
0 (0.1)
0 (0.1)
4.6 (4.6)
1.8 (1.9)
5.0 (5.0)
2.5 (2.5)
C3554 0.1
C3553 47/6.3
0 (0.1)
O/I CLK
O/I DATA
SV S CLK
SV S DATA
NTSC/PAL
REF
VDD
FSC
VSS
C-SYNC
ENV-SW
VD
REF-TRK
D-WD2
D-WD1
D-PH
TRK-CR
SLOW-CR
MC-BR
36 : MODE OUT
35 : ST + SLOW
1 : ROTARY
IC351 LC7418-9078 SERVO MPU
R3518 22K
R3519 22K
R3653 22K
R3965 47K
R3550 1K
R3551 1K
R3541 10K
R3882
C3607 0.0012
C3540 0.0047
C3501 0.022
C3955 390P
J3664
B3603 2SC3399 SWITCH
B3901 2SC3400 INVERTER
B3902 2SA1368 INVERTER
D3902
R3650 4.7K
R3904 100K
D3901
R3901 2.7K
HAMP SW
RF SW
AF SW
DL1
DL2
CTL
REMARK
REC-CTL
D-P
D-SW

SW12
SW5V
AL5V
D3001 DSK10C
Q5404 REGULATOR 2SD545F,E
R5407 5.6 1/4W
R5406 620
C5402 10/16V
D5404 MTZ5.6B
D5461 1SS244
D5460 1SS244
R5460 5.6K
Q5403 2SA984 KE,KF SWITCH
R5404 47K
R5405 300K
R5408 4.7K
R5409 4.7K
Q5406 2SC2960 E,F,G
Q5401 SWITCH 2SC3807
R5402 5.6K
R5401 4.7K
REGULATOR
R5403 430
Q5402 2SC3070
D5402 MTZ5.1A
C5401 0.01
D7002 MTZ6.8C
R7009 5.6K
REGULATOR
R7008 820
R7010 15K
D7001 1SS133
D7002 2SA984 KE,KF
(C703 μPC574J (L5631))
REGULATOR
C7003 0.1
C7004 22/50
C6005 4.7/25
C6003 1/50
C6002 4.7/25
C6004 0.1
D5403 1SS244
D6601 DSK10C
SWITCH
L6005
AL5V
L6602 15μH
L6601 15μH
L6051 56μH
C6602 100/6.3
C6601 100/6.3
316 AL 5V
315
SWD 5V
J6607
MEMORY IC701 M6M80021P
1 CS
2 CLK
3 DI
4 DC
VDD 8
7
RES 6
GND 5
C7001 0.01

R1645 470
R1646 75
C1643 0.01
D1641 1SS133
R1647 100
Q1643 2SA608F,G S CHROMA OUT DRIVER
D1642 1SS133
R1650 100
Q1644 2SA608F,G AV CHROMA OUT DRIVER
R1652 10K
R1651 220
R1653 10K
D1644 1SS133
Q1645 2SC536 AV CHROMA OUT CONTROL
R1648 470
D1643 1SS133
R1649 75
C1644 0.01
BUFFER Q1641 2SC536
R1641 1K
R1642 1.6K
R1643 1K
Q1642 2SC536 BUFFER
R1636 10K
C1642 0.01
L1641 100μ
Q1632 2SA608F,G BUFFER
R1633 47
R1634 220
R1635 75
D1632 1SS133
C1633 470/6.3
C1646 150P
D1631 1SS133
C1634 0.01
C1635 100/16
C1641 100/16
C1648 10/16
C1649 220P
C1631 22/16
C1632 22/10
R1630 1K
Q1631 2SA608F,G BUFFER
IC161 NJW2235 SWITCH
R1631 390
D1606 1SS133
L1601 100μ
C1601 0.01
D1605 1SS133
C1604 0.1
C1605 470P
R1604 470
R1605 1K
R1606 1K
C1606 0.01
C1607 0.01
C1608 0.01
C1609 0.01
C1610 0.01
C1611 0.01
C1612 0.01
C1613 0.01
C1614 0.01
C1615 0.01
C1616 0.01
C1617 0.01
C1618 0.01
C1619 0.01
C1620 0.01
C1621 0.01
C1622 0.01
C1623 0.01
C1624 0.01
C1625 0.01

# CP-A

# TB-1

IC351 LC7418-8078 SERVO MPU

36 : MODE OUT
35 : ST + SLOW
1 : ROTARY

NOTE
1. VOLTAGE : REC(PLAY) MODE

IC352 LA7122 AMP

IC392 B3952, B3954, B3957 ATR OFF SWITCH IN THE SPECIAL PLAYBACK MODE.

IC161 NJM2235 SWITCH

TO CP-A CN361

TO MC-5 (CTL HEAD)

TO TB-1 CN853

TO VD-1 CN124

TO AD-2 CN202

TO CP-2 CN192

TO DM-1 CN474

TO CP-2 CN159

TO AD-2 CN207

TO CP-2 CN148

TO TB-2 CN871

TO AD-2 CN209

TO AD-2 CN201

TO AD-1 CN223

AD Rch OUT

AD Lch OUT

RF CONVERTER

TN-1 TUNER IF

TUNER PACK

TN-4 PLL PACK

TN-3 TUNER AUDIO STEREO DECODER

SY-2

TAPE SPEED

TB-1

14 15 16 17 18 19 20 21 22 23 24 25 26 27 28

## AD-1 AUDIO Hi-Fi DEMODULATOR/NORMAL AUDIO

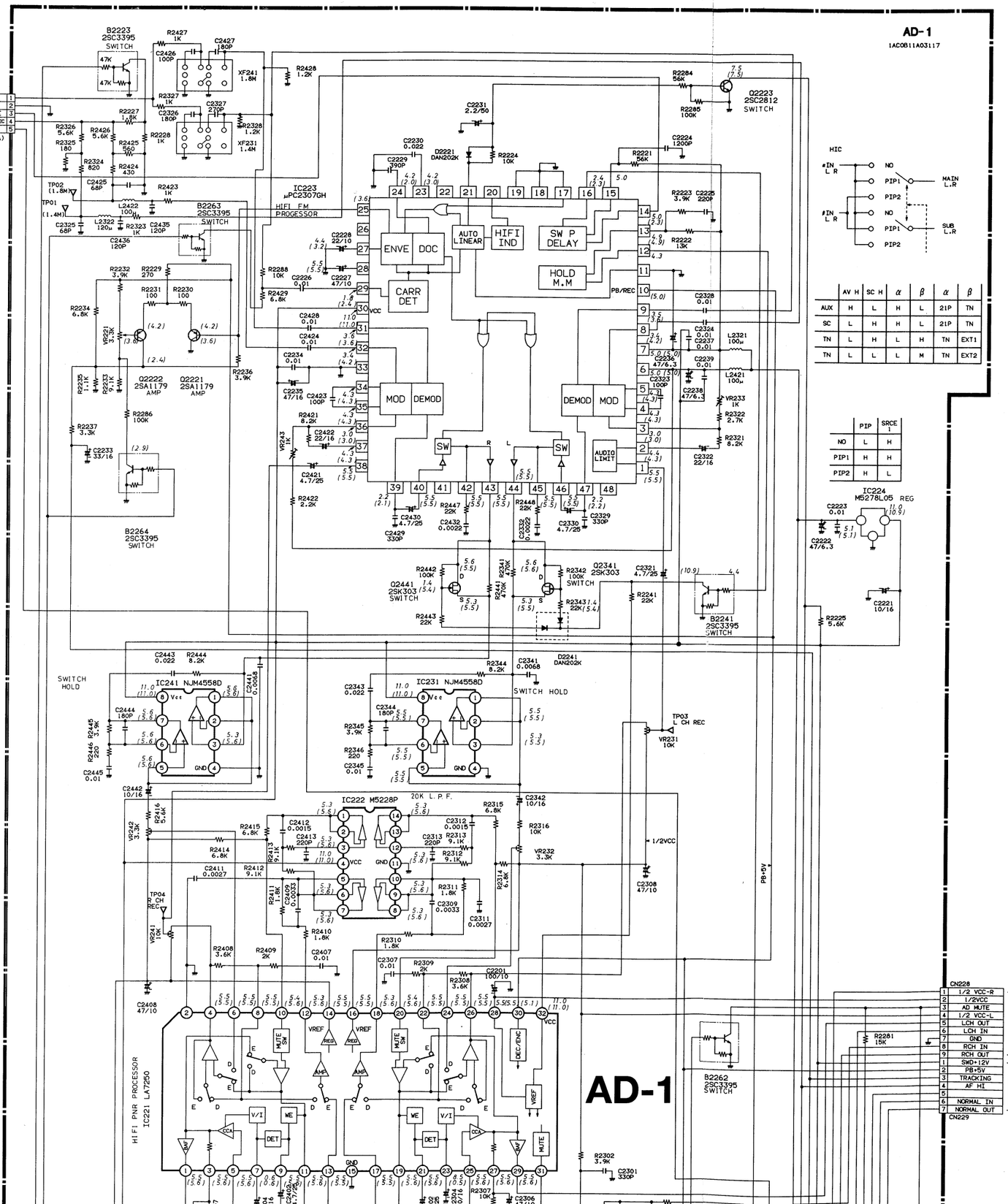


## AD-2 AUDIO INPUT/OUTPUT SIGNAL SELECT

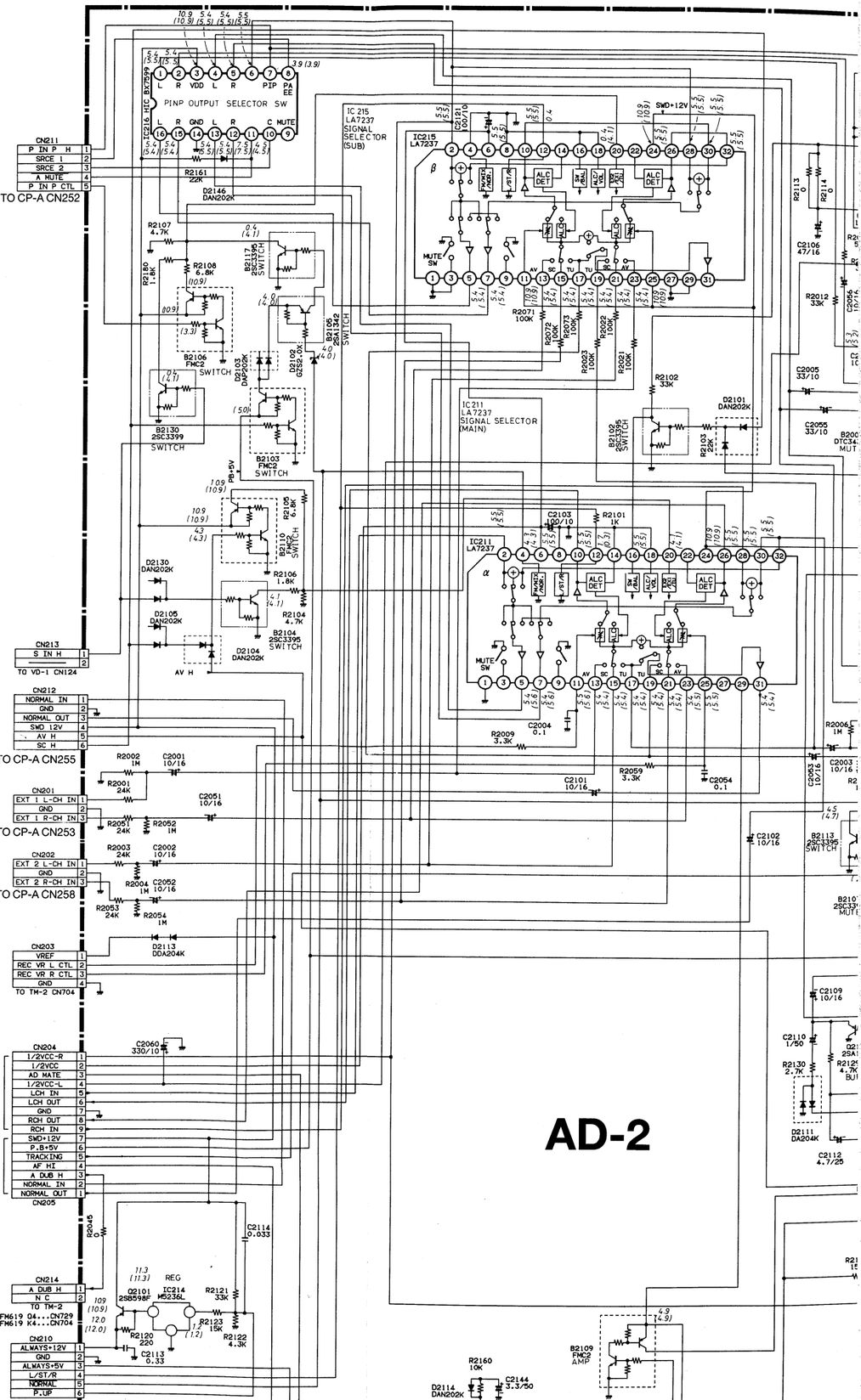

## D INPUT/OUTPUT SIGNAL SELECT

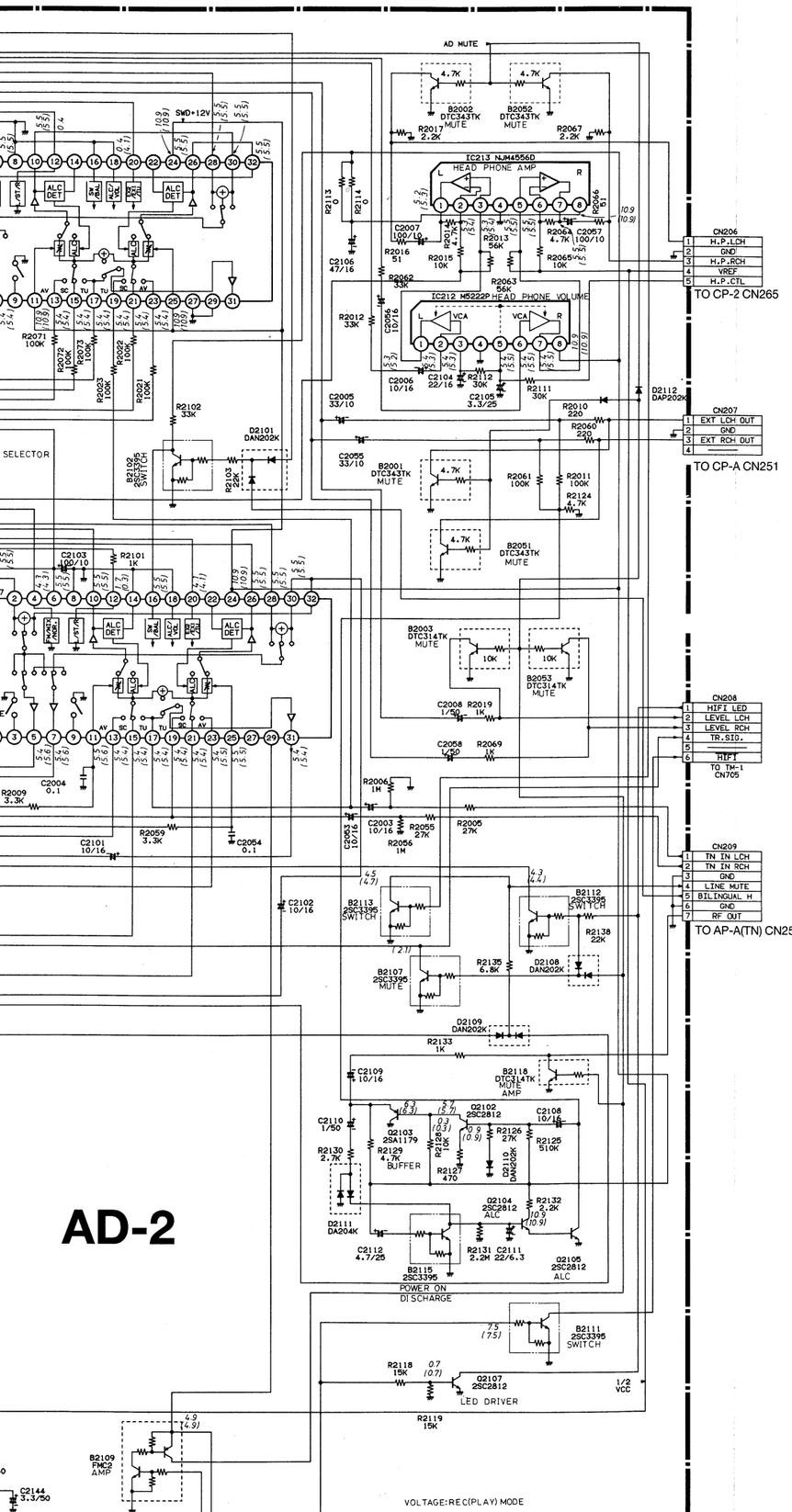


# AD-2

## IC216 (BX7599)

IC 1 & IC 2 SWITCH LOGIC

| INH Pin6 | A Pin10 | B Pin 9 | ON SWITCH X | ON SWITCH Y |
|---|---|---|---|---|
| L | L | L | 0X | 0Y |
| L | H | L | 1X | 1Y |
| L | L | H | 2X | 2Y |
| L | H | H | 3X | 3Y |
| H | ※ | ※ | OPEN | |

※ Don't Care

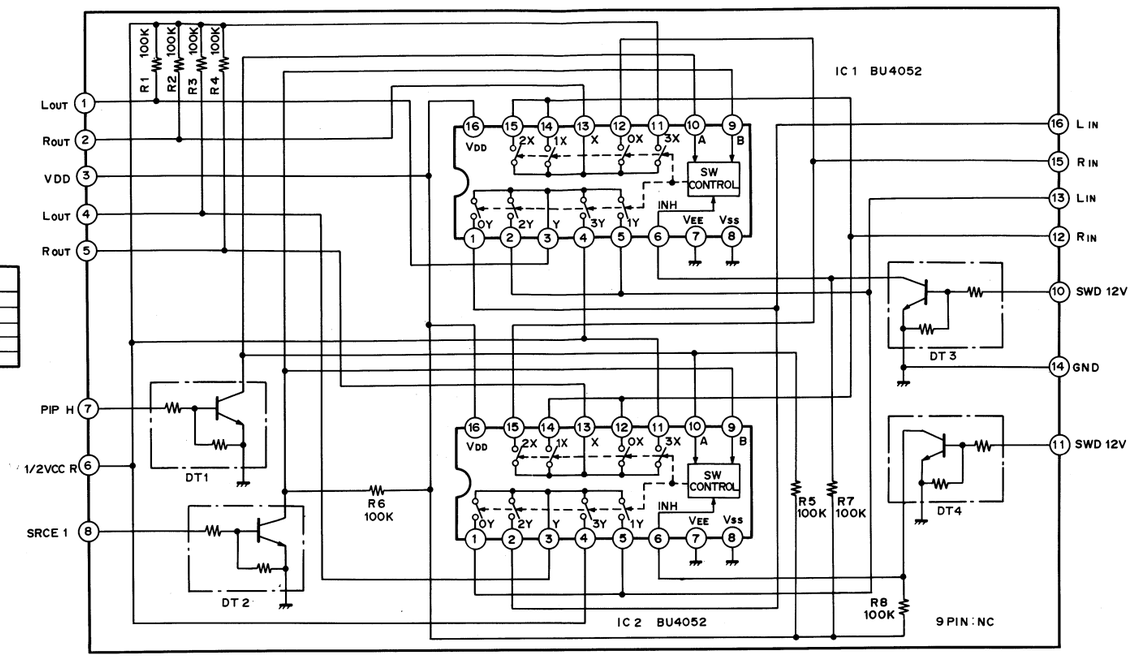


## AD-1 AUDIO Hi-Fi DEMODULATOR/NORMAL AUDIO P.C.B.

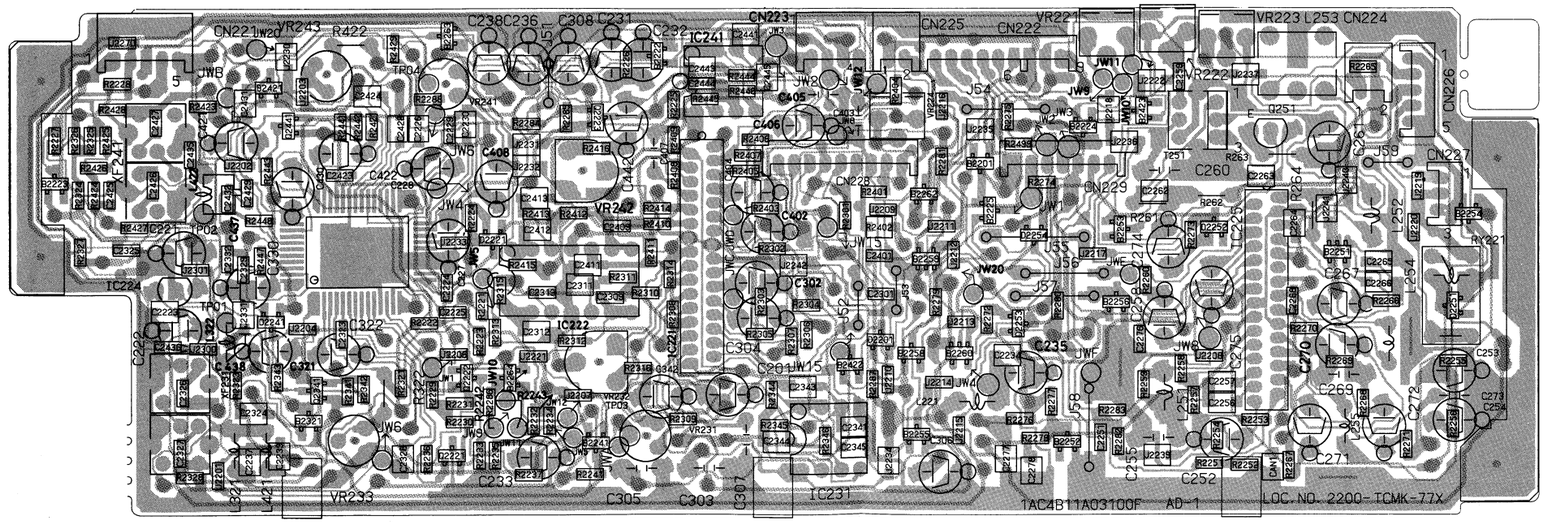


## AD-2 AUDIO INPUT/OUTPUT SIGNAL SELECT P.C.B.

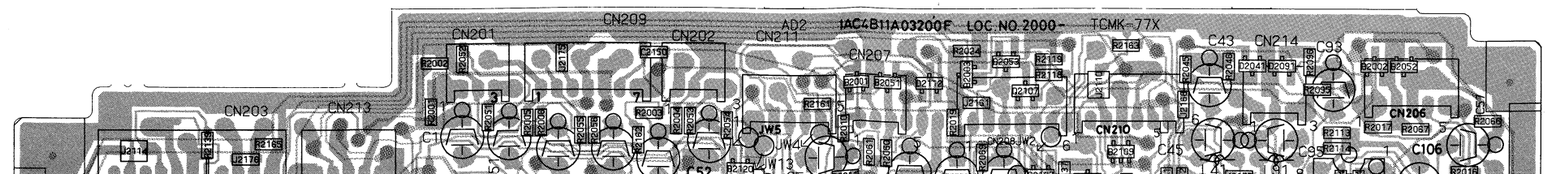

# AD-1

HIFI PNR PROCESSOR IC221 LA7250

IC241 NJM4558D

IC231 NJM4558D

IC222 M5228P 20K L.P.F.

NORMAL AUDIO PROCESSOR IC225 LA7294

SWITCH HOLD

REC HI

VOLTAGE: REC (PLAY) MODE

AF REC

TO CP-A(SY) CN304

TO CP-A(SV) CN371

TO CP-A(PW) CN303

TO CP-A CN255

TO CP-A CN253

TO CP-A CN258

TO TM-2 CN704

TO AD-1 CN228

TO AD-1 CN229

TO AD-2 CN204

TO AD-2 CN205

TO AD-1 CN221

TO VD-1 CN127

# AD-2

## Audio-Vorverstärker
## VP-1 AUDIO PRE-AMP

IC291 UPC2304 PRE-AMP

VOLTAGE

# AD-2

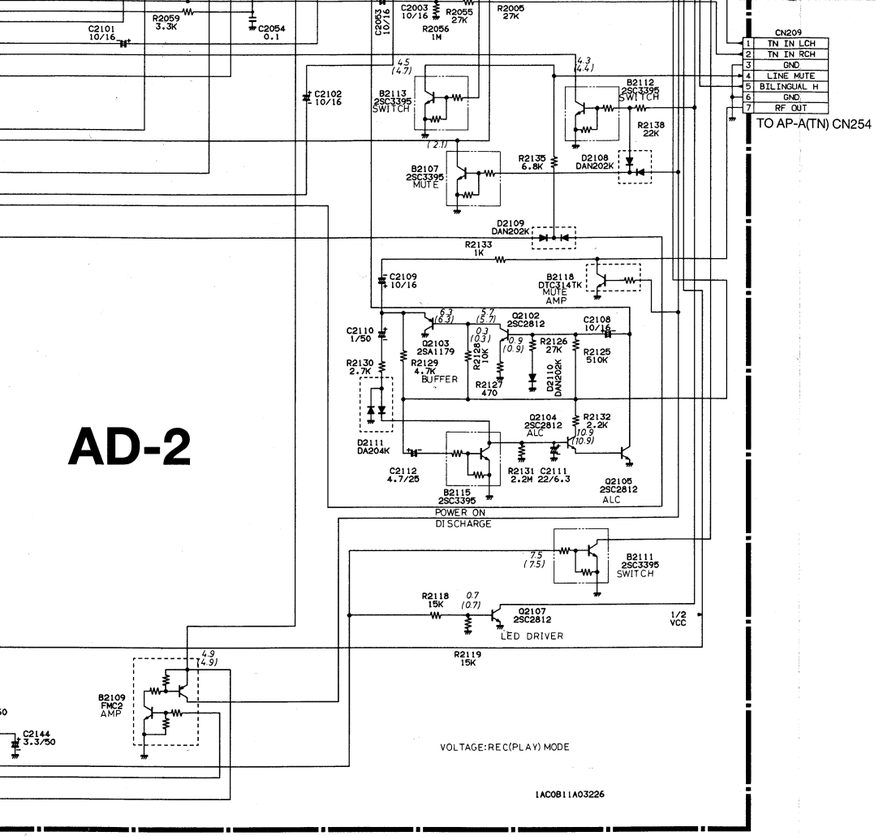


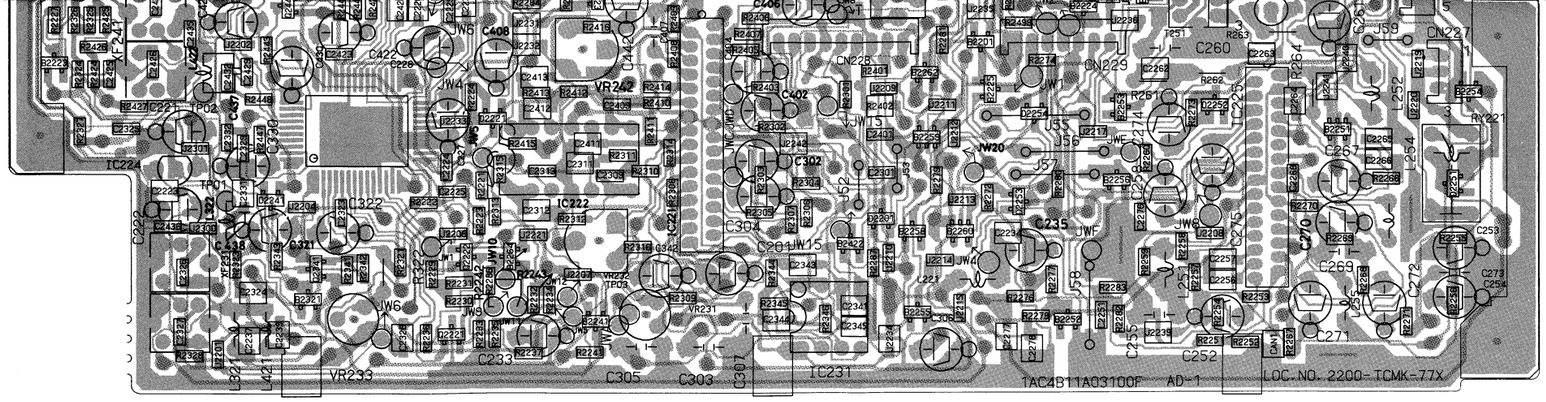


## AD-2 AUDIO INPUT/OUTPUT SIGNAL SELECT P.C.B.

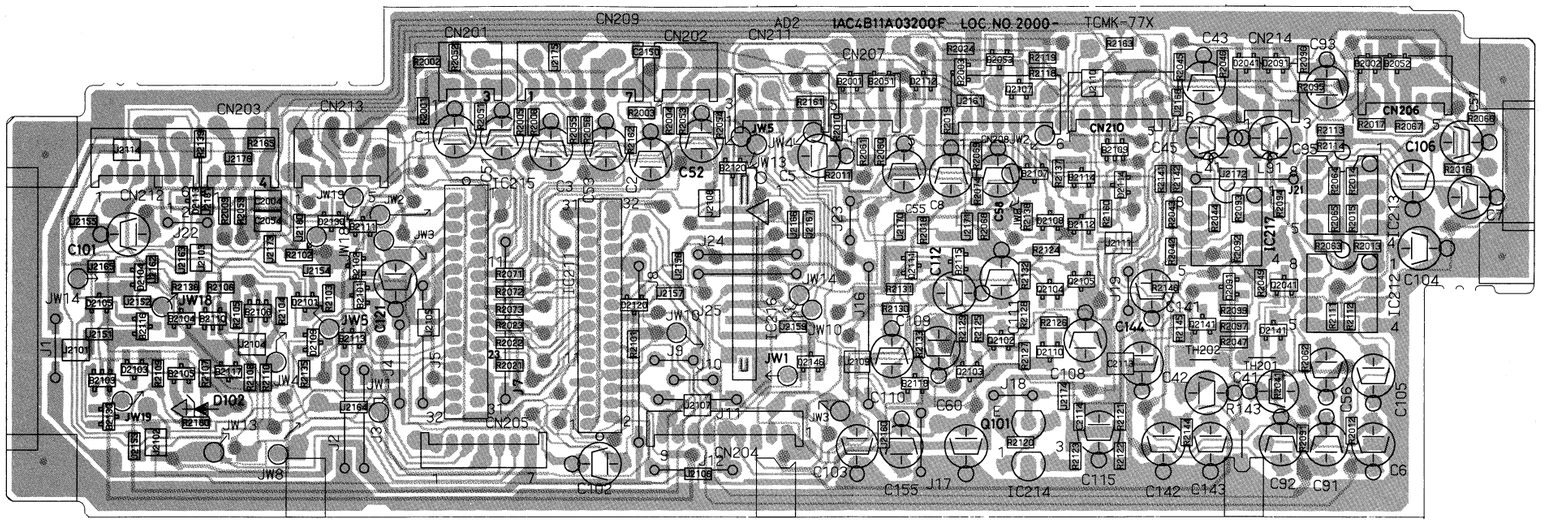


**M**

FM619 Q4
FM619 K4

## -Vorverstärker
## AUDIO PRE-AMP

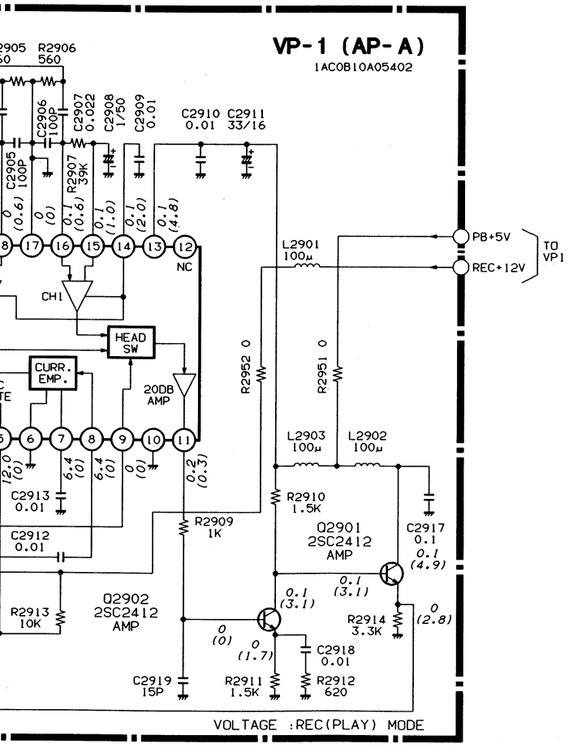


## VP-1 VIDEO & AUDIO PRE-AMP P.C.B.

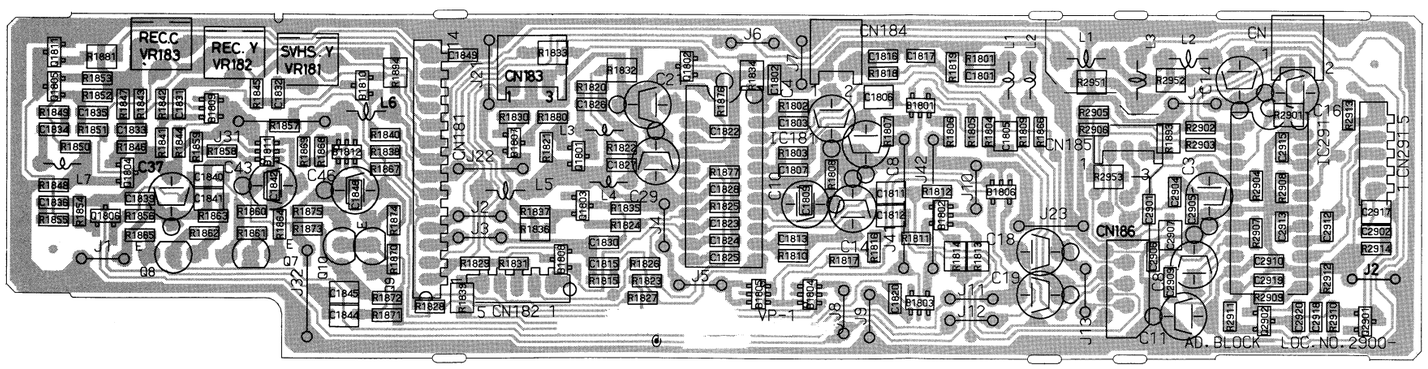


15 16 17 18 19 20 21 22 23 24 25 26 27 28 29 30 31

## TM-3 SYNC. SEPARATION & BACK GROUND FOR CHANNEL SCAN P.C.B.

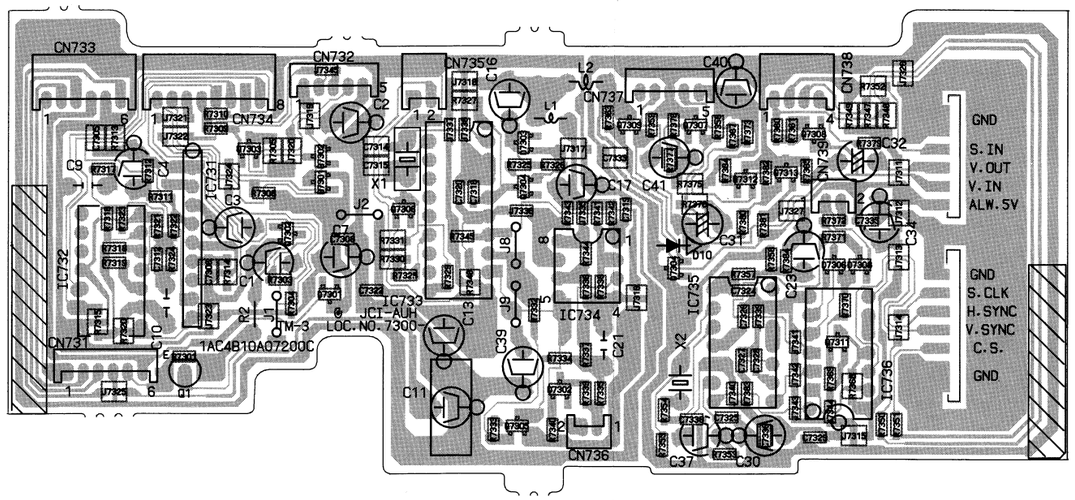


## TM-4 BACK GROUND GENERATOR P.C.B.

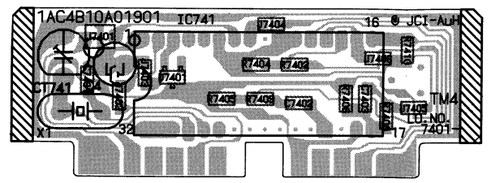


## TM-2 MIC. AMP & SWITCH P.C.B. (FM619 Q4)

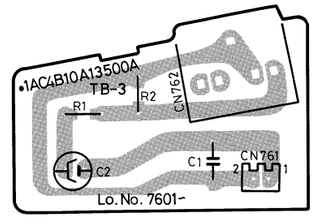


## TB-3 MIC. JACK P.C.B. (FM619 Q4)

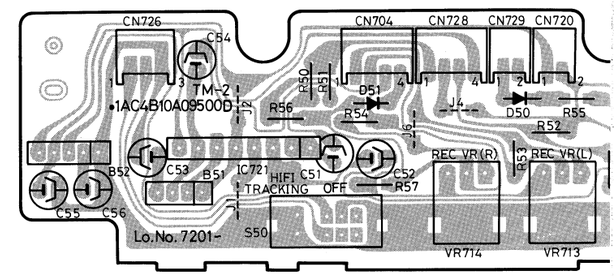


## TM-3,4 VPS. TV REMOTE CONTROL & BACK GROUND FOR CH SCAN

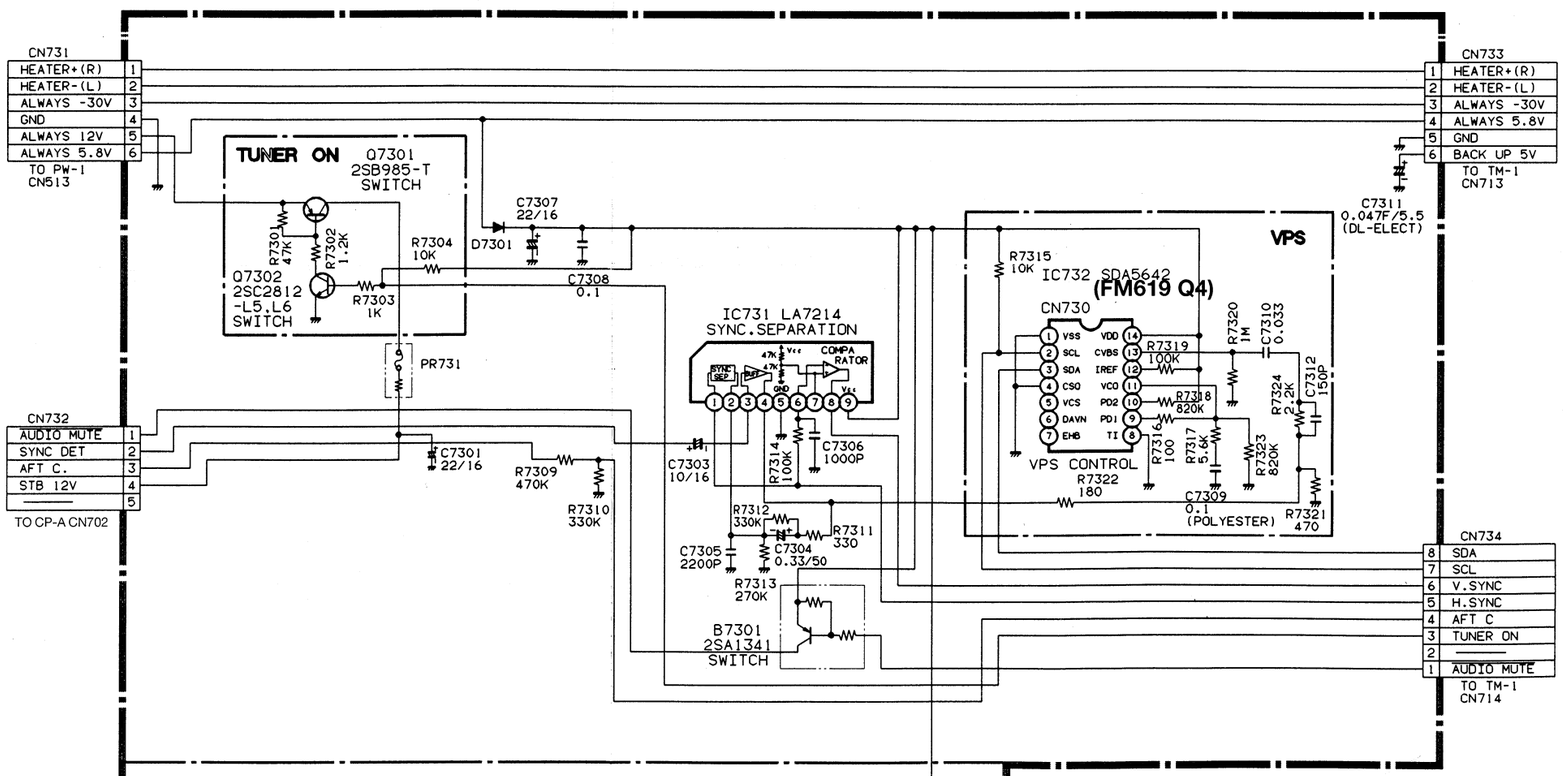


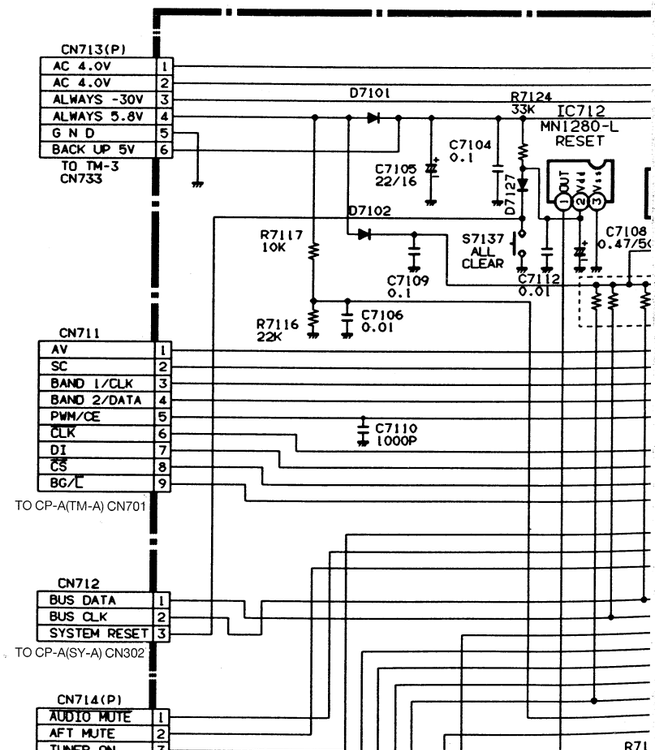

P & SWITCH P.C.B. (FM619 Q4)

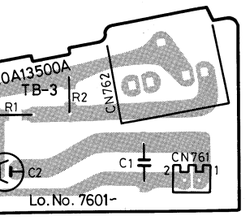


C. JACK P.C.B. (FM619 Q4)

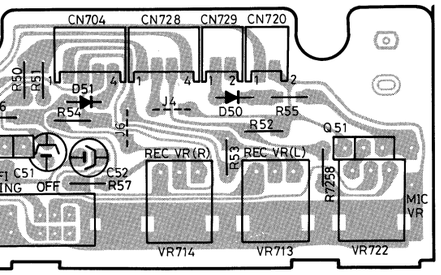


TM-1 TIMER, DISPLAY, TUNING CONTROL & SWITCH P.C.B.

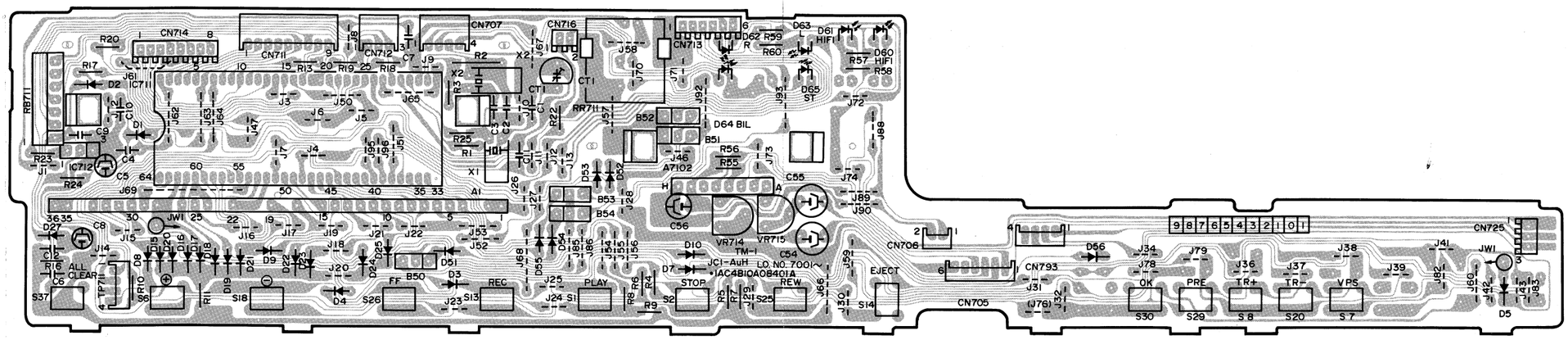


TM-1,2 Bedienteil, Timer, Anzeige

TB-3 TIMER, DISPLAY, TUNING CONTROL, SWITCH, MIC. AMP & MIC. JACK (FM619 Q4)

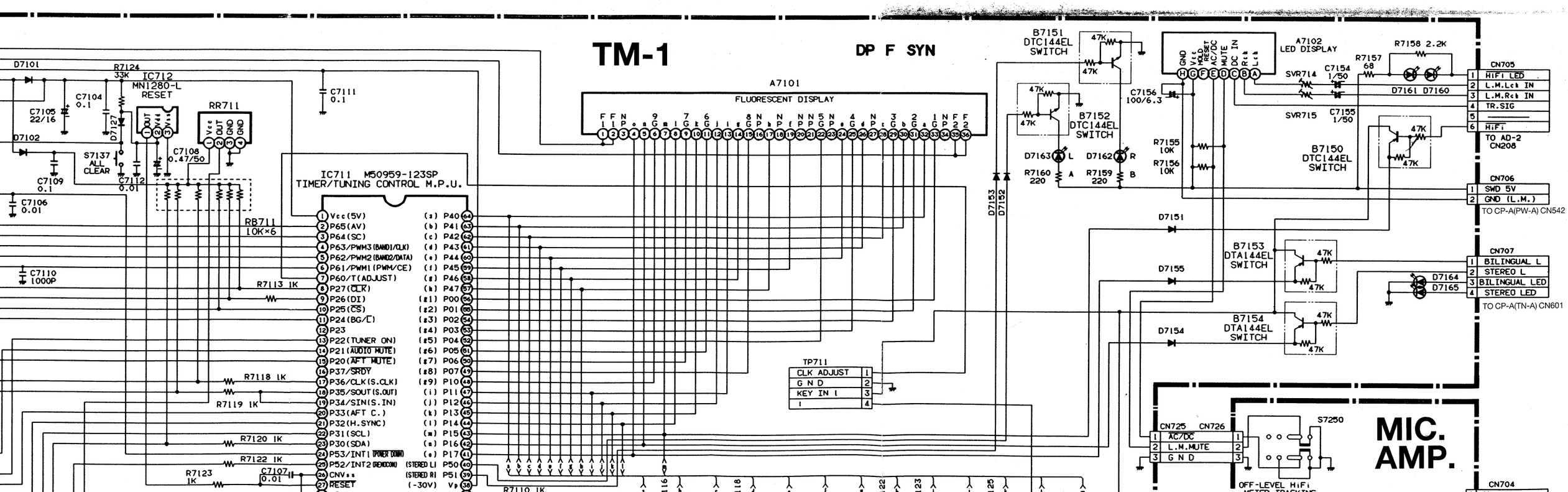

**N**

FM619 Q4
FM619 K4

## TV REMOTE CIRCUIT

## BACK GROUND FOR CH-SCAN.

# TM-3

## BACK GROUND GENERATOR

## TM-4

NOTE NOT SPECIFIED DIODE---DCB015 or DAN202K

FM619 Q4 : 1AC0B10A07215
FM619 K4 : 1AC0B10A07217

### ANODE CONNECTION

| | 9G | 8G | 7G | 6G | 5G | 4G | 3G | 2G | 1G |
|---|---|---|---|---|---|---|---|---|---|
| a | REC | TAPE | a1 | a1 | a1 | a1 | a1 | a1 | START |
| b | ▶ | PROG. | b1 | b1 | b1 | b1 | b1 | b1 | |
| c | | SC | c1 | c1 | c1 | c1 | c1 | c1 | DP |
| d | ×2 | DATE | d1 | d1 | d1 | d1 | d1 | d1 | M(1) |
| e | | TIMER | e1 | e1 | e1 | e1 | e1 | e1 | AFT |
| f | | DNR | f1 | f1 | f1 | f1 | f1 | f1 | ST |
| g | - | VTR | g1 | g1 | g1 | g1 | g1 | g1 | col.1 |
| h | - | OTR | | | - | - | - | | DU |
| i | | M | a2 | a2 | a2 | a2 | a2 | a2 | STOP |
| j | ▶▶ | - | b2 | b2 | b2 | b2 | b2 | b2 | S |
| k | - | EP | c2 | c2 | c2 | c2 | c2 | c2 | - |
| l | - | VPS | d2 | d2 | d2 | d2 | d2 | d2 | H |
| m | - | - | e2 | e2 | e2 | e2 | e2 | e2 | M(2) |
| n | ◀◀ | - | f2 | f2 | f2 | f2 | f2 | f2 | - |
| o | ▮▮ | LP | g2 | g2 | g2 | g2 | g2 | g2 | col.2 |

# TM-1

DP F SYN

A7101
FLUORESCENT DISPLAY

IC712 MN1280-L RESET

RR711

IC711 M50959-123SP
TIMER/TUNING CONTROL M.P.U.

| | | | |
|---|---|---|---|
| 1 | Vcc(5V) | (a) | P40 |
| 2 | P65(AV) | (b) | P41 |
| 3 | P64(SC) | (c) | P42 |
| 4 | P63/PWM3(BAND1/CLK) | (d) | P43 |
| 5 | P62/PWM2(BAND2/DATA) | (e) | P44 |
| 6 | P61/PWM1(PWM/CE) | (f) | P45 |
| 7 | P60/T(ADJUST) | (g) | P46 |
| 8 | P27(CLK) | (h) | P47 |
| 9 | P26(DI) | (g1) | P00 |
| 10 | P25(CS) | (g2) | P01 |
| 11 | P24(BG/L) | (g3) | P02 |
| 12 | P23 | (g4) | P03 |
| 13 | P22(TUNER ON) | (g5) | P04 |
| 14 | P21(AUDIO MUTE) | (g6) | P05 |
| 15 | P20(AFT MUTE) | (g7) | P06 |
| 16 | P37/SRDY | (g8) | P07 |
| 17 | P36/CLK(S.CLK) | (g9) | P10 |
| 18 | P35/SOUT(S.OUT) | (i) | P11 |
| 19 | P34/SIN(S.IN) | (j) | P12 |
| 20 | P33(AFT C.) | (k) | P13 |
| 21 | P32(H.SYNC) | (l) | P14 |
| 22 | P31(SCL) | (m) | P15 |
| 23 | P30(SDA) | (n) | P16 |
| 24 | P53/INT1(POWER DOWN) | (o) | P17 |
| 25 | P52/INT2(REMOCON) | (STEREO L) | P50 |
| 26 | CNVss | (STEREO R) | P51 |
| 27 | RESET | (-30V) | Vp |
| 28 | XIN 6.291456MHz | (KEY IN 1) | P54 |
| 29 | XOUT | (KEY IN 2) | P55 |
| 30 | XcIN 32.768KHz | (KEY IN 3) | P56 |
| 31 | XcOUT | (KEY IN 4) | P57 |
| 32 | Vss(0V) | (HALT) | |

TP711

| | |
|---|---|
| CLK ADJUST | 1 |
| G N D | 2 |
| KEY IN 1 | 3 |
| 1 | 4 |

B7151 DTC144EL SWITCH
B7152 DTC144EL SWITCH
B7153 DTA144EL SWITCH
B7154 DTA144EL SWITCH
B7150 DTC144EL SWITCH

A7102 LED DISPLAY

CN705
| | |
|---|---|
| 1 | HiFi LED |
| 2 | L.M.Lch IN |
| 3 | L.M.Rch IN |
| 4 | TR.SIG |
| 5 | |
| 6 | HiFi |

TO AD-2 CN208

CN706
| | |
|---|---|
| 1 | SWD 5V |
| 2 | GND (L.M.) |

TO CP-A(PW-A) CN542

CN707
| | |
|---|---|
| 1 | BILINGUAL L |
| 2 | STEREO L |
| 3 | BILINGUAL LED |
| 4 | STEREO LED |

TO CP-A(TN-A) CN601

## MIC. AMP.

CN725 CN726
| | | |
|---|---|---|
| 1 | AC/DC | 1 |
| 2 | L.M.MUTE | 2 |
| 3 | G N D | 3 |

S7250
OFF-LEVEL HiFi METER TRACKING

CN704
| | |
|---|---|
| 1 | V ref |
| 2 | REC VR Lch |
| 3 | REC VR Rch |
| 4 | G N D |

TO AD-2 CN203

CN793
| | |
|---|---|
| 1 | SEG C |
| 2 | KEY IN 4 |
| 3 | SEG m |

TO TM-5 CN754

IC721 BA15218N AMP

CN728
| | |
|---|---|
| NORMAL OUT | 1 |
| G N D | 2 |
| NORMAL IN | 3 |
| SWD 12V | 4 |

TO CP-A CN256

CN729
| | |
|---|---|
| A.DUB H | 1 |
| | 2 |

TO AD-2 CN214

D7251 2SC2021

TM-2

CN720
| | | |
|---|---|---|
| 1 | MIC OUT(IN) | 1 |
| 2 | G N D | 2 |

CN761

TB-3

MIC. JACK P.C.B.

NOT SPECIFIED DIODE---GMA01 or1SS133

GRID ASSIGNMENT / DISPLAY

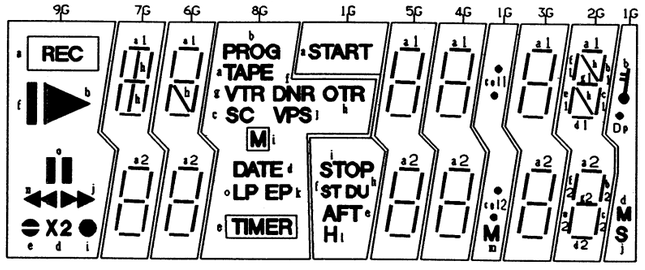


| 4G | 3G | 2G | 1G |
|---|---|---|---|
| a1 | a1 | a1 | START |
| b1 | b1 | b1 | 3 |
| c1 | c1 | c1 | DP |
| d1 | d1 | d1 | M(1) |
| e1 | e1 | e1 | AFT |
| f1 | f1 | f1 | ST |
| g1 | g1 | g1 | col.1 |
| - | - | \ | DU |
| a2 | a2 | a2 | STOP |
| b2 | b2 | b2 | S |
| c2 | c2 | c2 | - |
| d2 | d2 | d2 | H |
| e2 | e2 | e2 | M(2) |
| f2 | f2 | f2 | - |
| g2 | g2 | g2 | col.2 |

16 17 18 19 20 21 22 23 24 25 26 27 28 29 30 31

# CP-2

## S-Buchsenplatte
### TM-7 S. INPUT TERMINAL

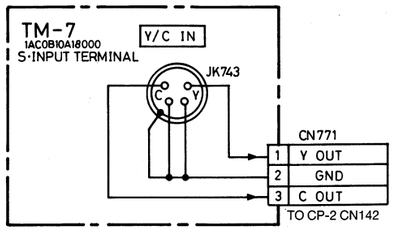


## Kopfhörerbuchsenplatte
### TM-6 H.P. JACK P.C.B.

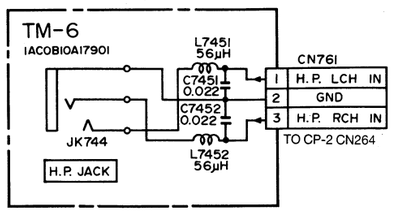

## COMPL. CP-2 VIDEO (1)

# CP-2

NOTE
VOLTAGE INDICATION:
1. SHOWN WITHOUT PARENTHESIS: PLAY OR RECODE (SP) MODE.
2. SHOWN IN PARENTHSIS = PLAY (SP) MODE ONLY.
3. (S): S VHS MODE.
4. (N): NORMAL VHS MODE.
5. LP TAPE SPEED MODE.

SETTING
INPUT: AV (COLOUR BAR)
MODE: S VHS SP MODE.

1AC0B11A08002

Q1502, Q1503 : BUFFER

Q1539, Q1541, Q1544, Q1546, Q1547, Q1549, Q1552 ─ AMP

Q1540, Q1542, Q1543, Q1551, Q1545, Q1548 Q1550 ─ BUFFER

Q1931, Q1932, Q1933, Q1936 ─ BUFFER

IC143 NJM2234S SELECTOR

IC148 NJM2235S SELECTOR

IC193 BA7605N SELECTOR

THROUGH VIDEO INPUT SELECT

PIP CTL SWITCH

CN191
1 CH SCAN H
2 THRU VD OUT
3 G N D
4 AGC VD OUT
5 G N D
6 DIGI VD IN
7 G N D
TO DM-1 CN472

CN151
1 B/W L
2 VD SECAM H
3 G N D
TO VD-1 CN131

A IH DELAY Y OUT
B IH DELAY Y IN
C COMB F.CTL
TO VD-1

CN153
1 G N D
2 PBC IN
3 REC 90H
4 G N D
5 ACC IN
6 G N D
7 ACC OUT
TO VD-1 CN133

CN146
1 CVBS OUT
2 G N D
3 Y OUT
4 G N D
5 C OUT
6 G N D
TO CP-A CN106

CN152
1 AGC VD OUT
2 G N D
3 AGC VD IN
4 G N D
5 VIDEO IN
6 G N D
TO VD-1 CN132

## S-Buchsenplatte
### TM-7 S. INPUT TERMINAL

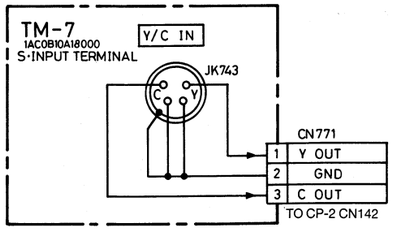


## Kopfhörerbuchsenplatte
### TM-6 H.P. JACK P.C.B.

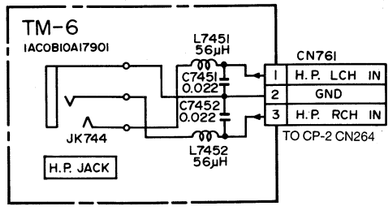


### TM-5 SWITCH & AUDIO INPUT TERMINAL

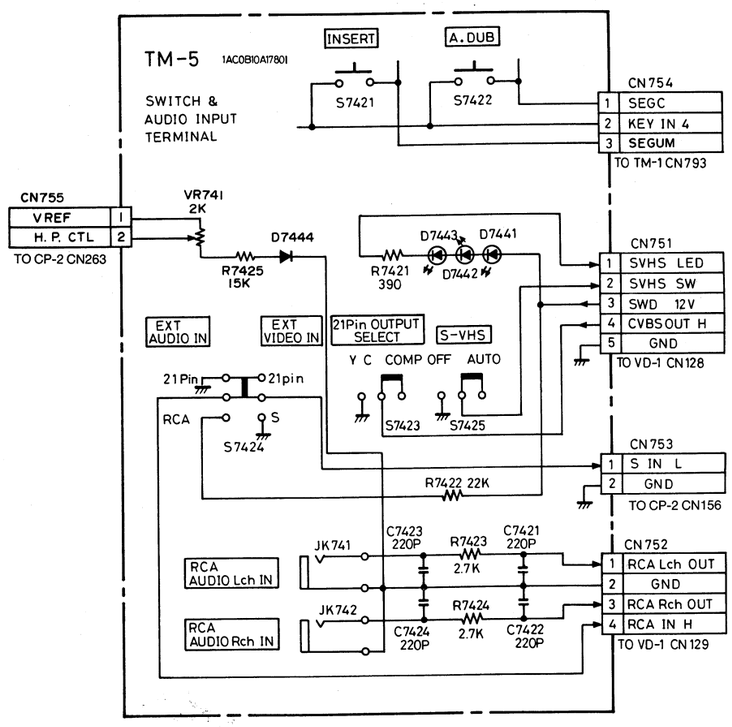


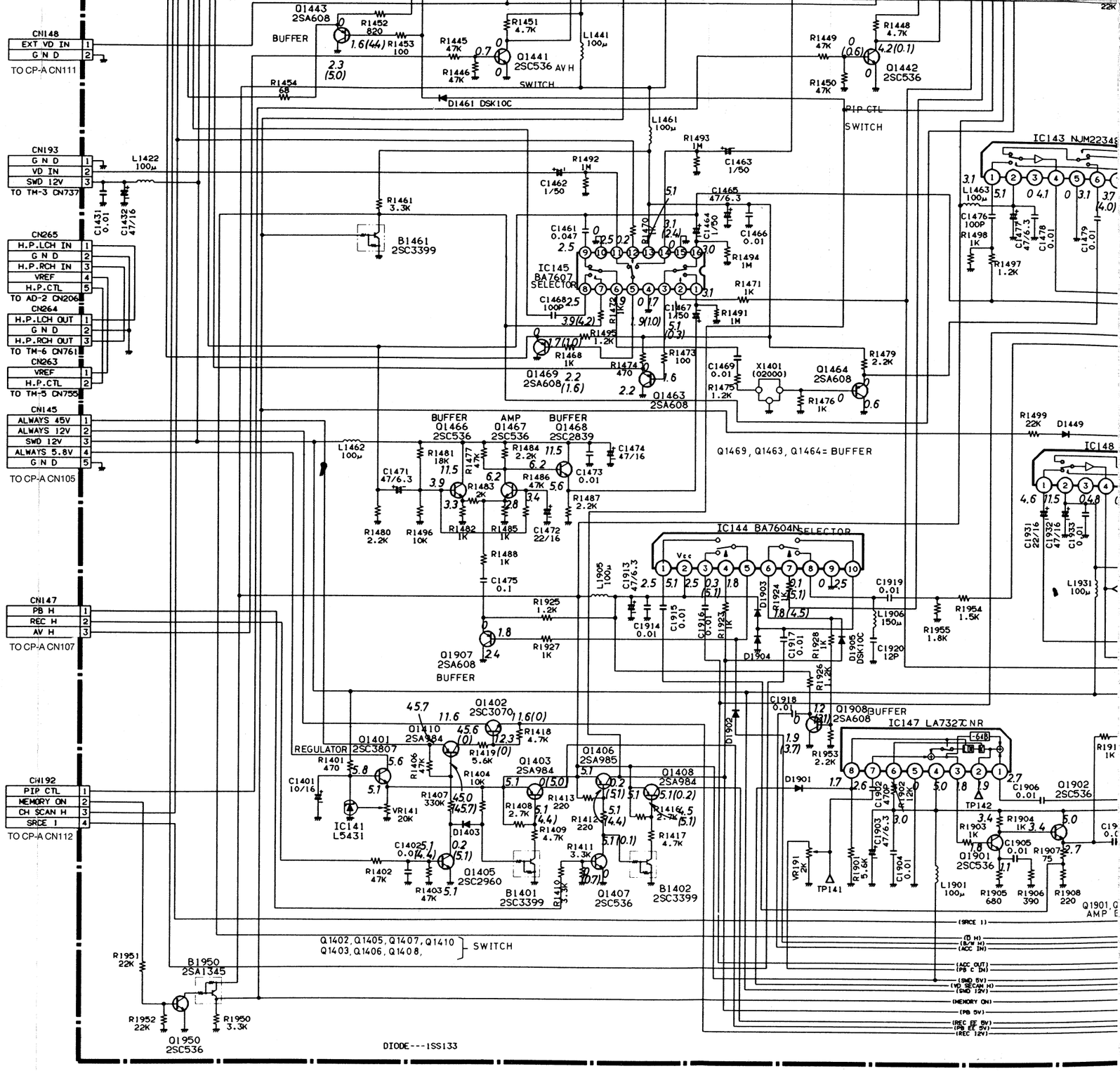

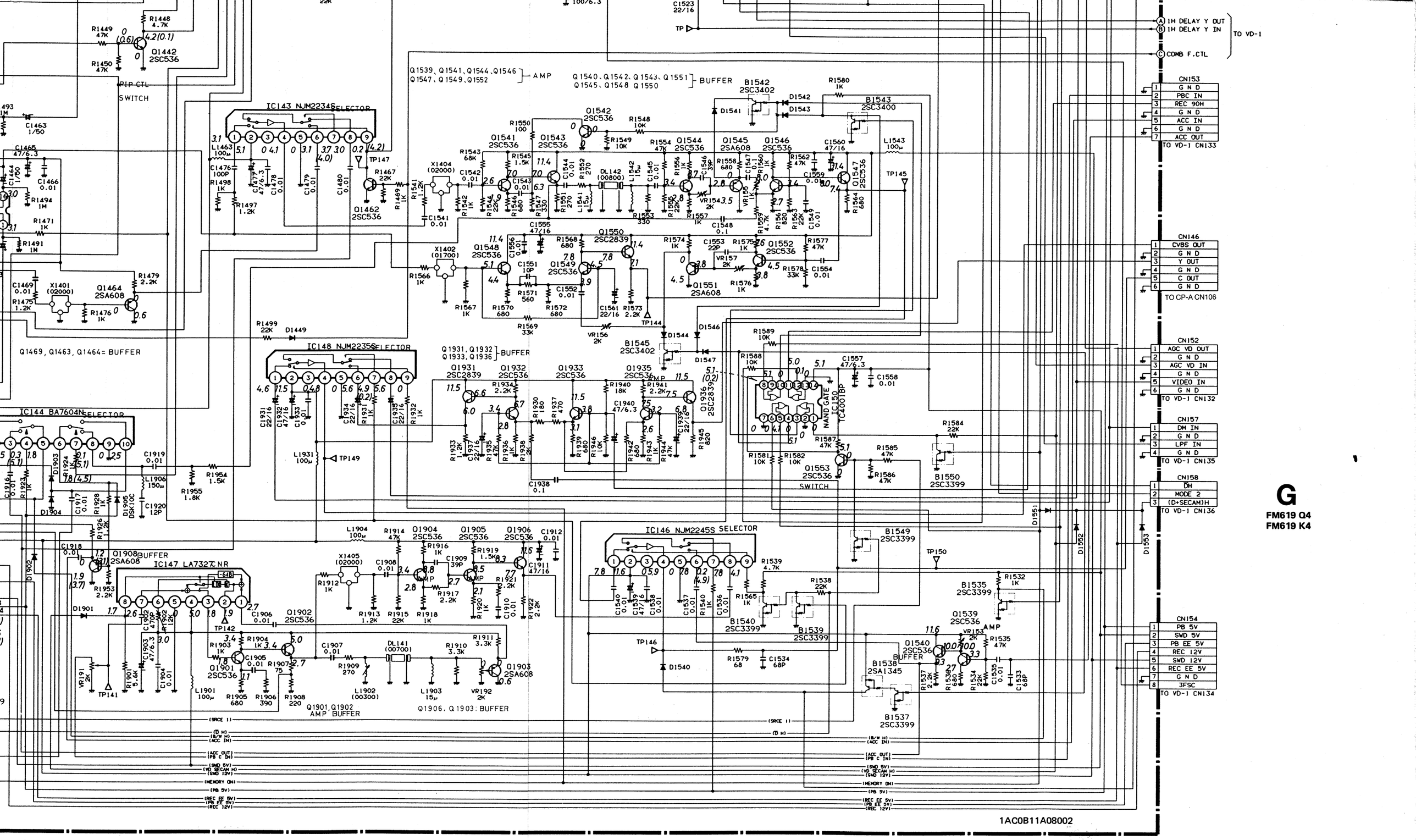


13 14 15 16 17 18 19 20 21 22 23 24 25 26 27 28

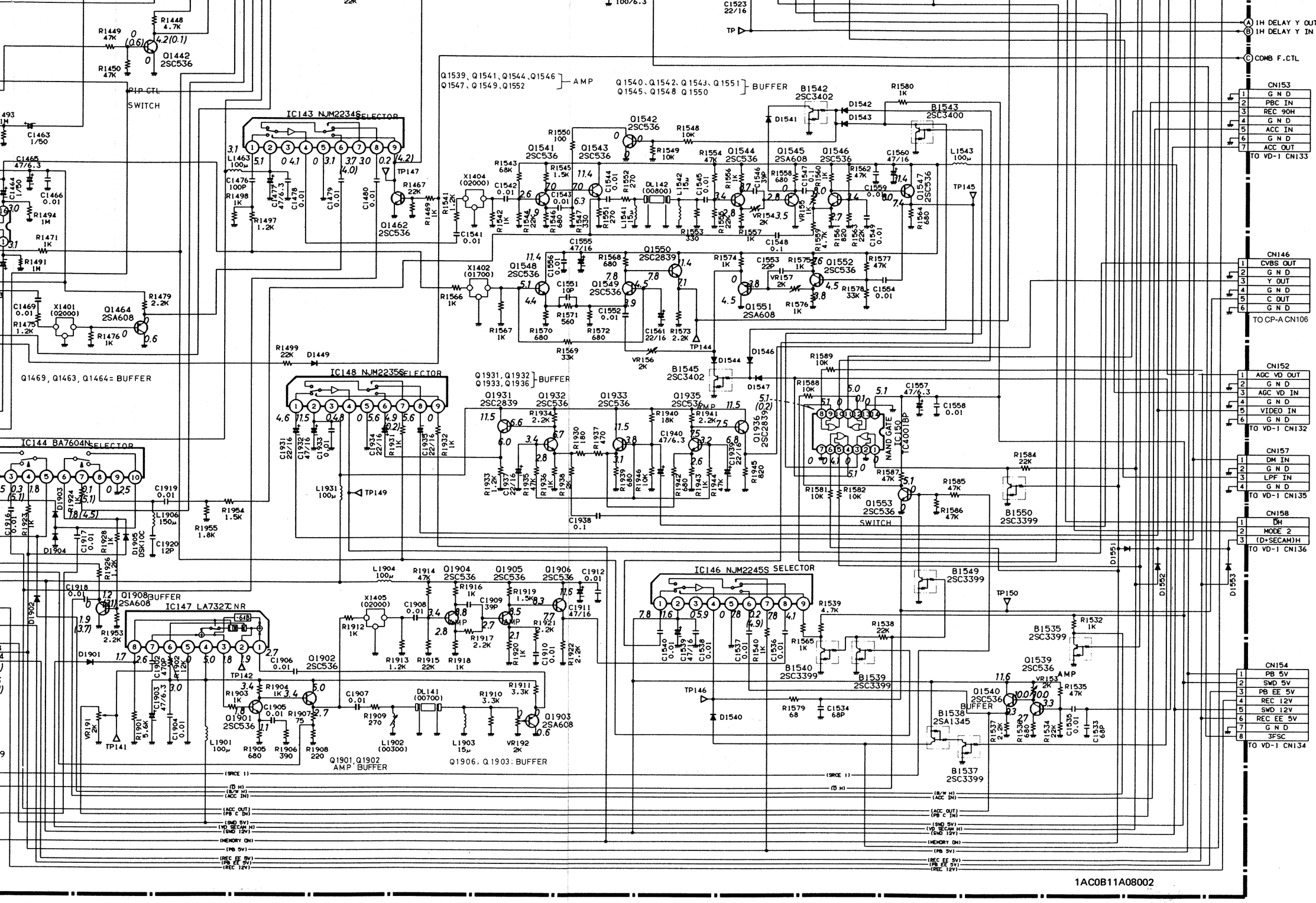


**G**

**FM619 Q4**
**FM619 K4**

1AC0B11A08002

13 | 14 | 15 | 16 | 17 | 18 | 19 | 20 | 21 | 22 | 23 | 24 | 25 | 26 | 27 | 28

NOTE
VOLTAGE INDICATION:
1. SHOWN WITHOUT PARENTHESIS: PLAY OR RECODE (SP) MODE.
2. SHOWN IN PARENTHSIS = PLAY (SP) MODE ONLY.
3. (S): S VHS MODE.
4. (N): NORMAL VHS MODE.
5. LP TAPE SPEED MODE.

DIODE : 1SS133

SETTING
INPUT: AV (COLOUR BAR)
MODE: S VHS SP MODE.

CN126: PB 5V 1, PB Y 2, G N D 3, PB C 4, SP H 5, LP H 6, S-VHS H 7, REC 12V 8, REC Y (S) 9, G N D 10, REC Y (N) 11, REC C 12, G N D 13, VD REC 14 — TO VP-1 CN181

CN125: G N D 1, PB 5V 2, REC 12V 3, VD REC 4, SND 5V 5 — TO VD-3 CN175

CN122: E N V 1, G N D 2, C SYNC 3, Q.VD 4, ROTARY 5, LP H 6, BURST GATE P 7 — TO CP-A CN104

CN123: PICTURE VR 1, SND 5V 2, G N D 3 — TO CP-A CN102

CN121: CVBS OUT H 1, S TAPE SW 2, VD Fsc 3, G N D 4, 5, 6 — TO CP-A CN103

B1960, Q1961, Q1962 : SWITCH

B1240, B1962, B1961, B1960 — SWITCH

Q1205 ~ Q1207 : S VHS EQ AMP

Q1121 PB VHS NL OFF SWITCH

PAL 0 SECAM 2.2

# COMPL. VD-1 VIDEO (2)

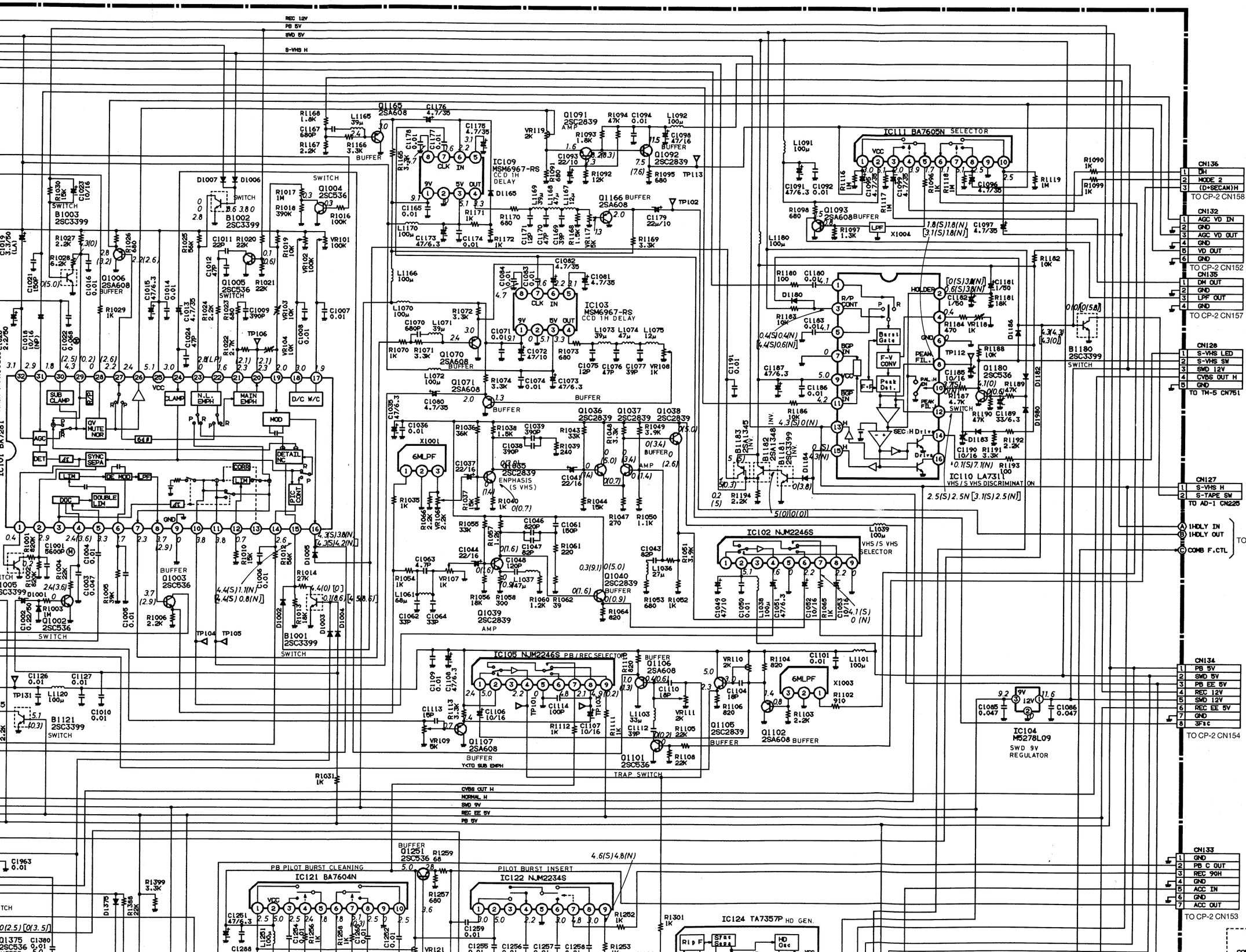

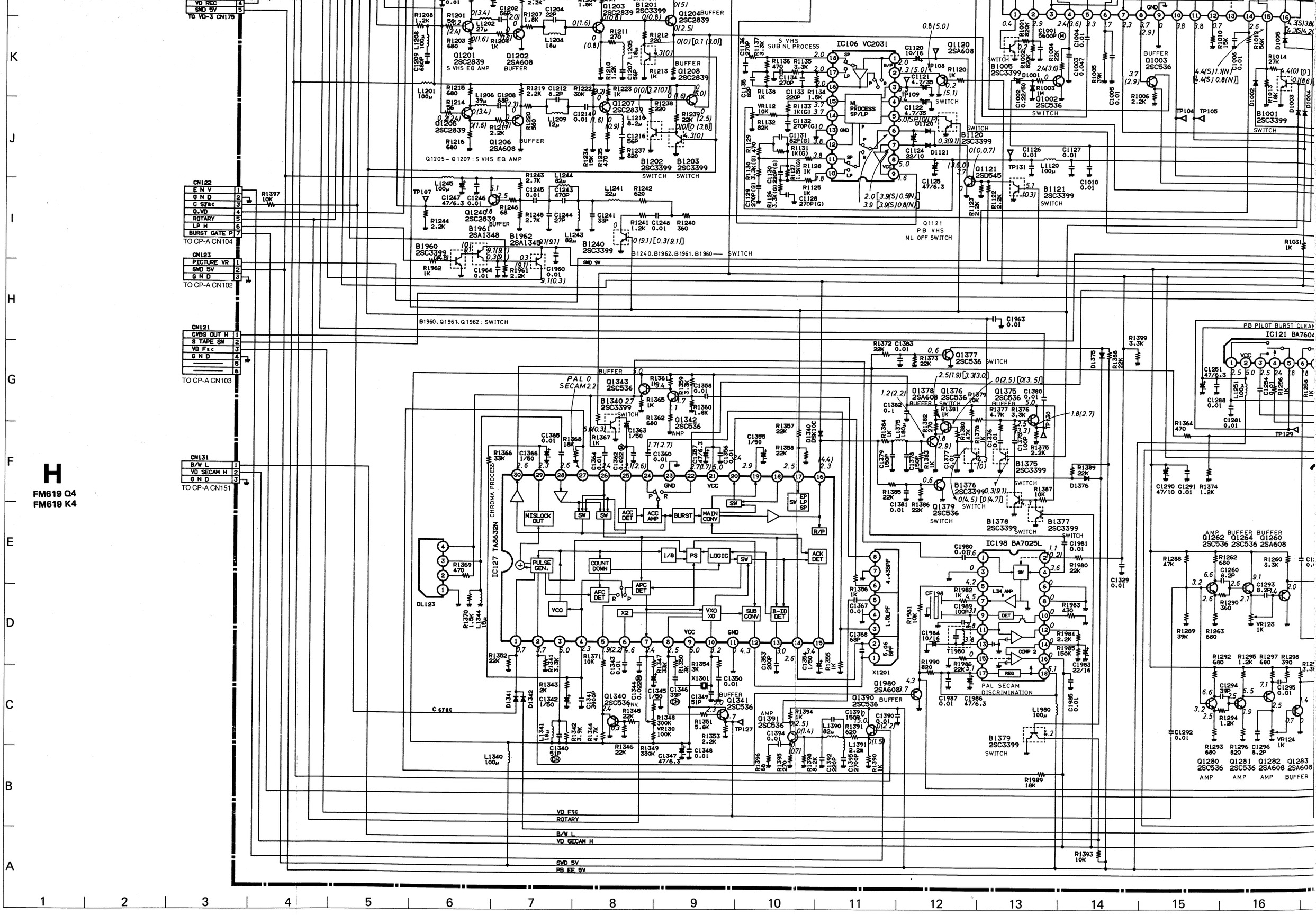

H
FM619 Q4
FM619 K4
IC106 VC2031
IC127 TA8632N
IC198 BA7025L
IC121 BA7604
Q1121
PB VHS
NL OFF SWITCH
Q1205~Q1207 : S VHS EQ AMP
B1240, B1962, B1961, B1960 — SWITCH
B1960, Q1961, Q1962 : SWITCH
PAL 0
SECAM 2.2
PAL SECAM
DISCRIMINATION
CHROMA PROCESS
MISLOCK OUT
PULSE GEN.
COUNT DOWN
AFC DET
APC DET
VCO
ACC DET
ACC AMP
BURST
MAIN CONV
LOGIC
PS
SUB CONV
B-ID DET
ACK DET
VD Fsc
ROTARY
B/W L
VD SECAM H
SWD 5V
PB EE 5V
CN122
CN123
CN121
CN131
TO CP-A CN104
TO CP-A CN102
TO CP-A CN103
TO CP-A CN151
TO VD-3 CN175

**H**

**FM619 Q4**
**FM619 K4**

VD REC
SWD 5V
TO VD-3 CN175

CN122
E N V
G N D
C S'fsc
Q.VD
ROTARY
LP H
BURST GATE P
TO CP-A CN104

CN123
PICTURE VR
SWD 5V
G N D
TO CP-A CN102

CN121
CVBS OUT H
S TAPE SW
VD Fsc
G N D
TO CP-A CN103

CN131
B/W L
VD SECAM H
G N D
TO CP-A CN151

R1397 10K

Q1205~ Q1207 : S VHS EQ AMP

B1960, B1961, B1962 : SWITCH

S VHS SUB NL PROCESS

IC106 VC2031

Q1121 P B VHS NL OFF SWITCH

B1240, B1962, B1961, B1960 — SWITCH

SWD 9V

PB PILOT BURST CLEAN

IC121 BA7604

IC127 TA8632N CHROMA PROCESS

IC198 BA7025L

PAL SECAM DISCRIMINATION

AMP BUFFER BUFFER
Q1262 Q1264 Q1260
2SC536 2SC536 2SA608

Q1280 Q1281 Q1282 Q1283
2SC536 2SC536 2SA608 2SA608
AMP AMP AMP BUFFER

VD Fsc
ROTARY
B/W L
VD SECAM H
SWD 5V
PB EE 5V

1 2 3 4 5 6 7 8 9 10 11 12 13 14 15 16

A B C D E F G H I J K

# VD-1

1AC0B10A18404

IC121 BA7604N — PB PILOT BURST CLEANING

IC122 NJM2234S — PILOT BURST INSERT

IC123 AN6367K — ACC

IC124 TA7357P — HD GEN.

IC125 TC4538BF — PILOT BURST GATE PULSE GEN.

IC102 NJM2246S — VHS/S VHS SELECTOR

IC105 NJM2246S — PB/REC SELECTOR

IC104 M5278L09 — SWD 9V REGULATOR

TO CP-2 — A 1HDLY IN, B 1HDLY OUT, C COMB F.CTL

TO CP-2 CN154 — CN134: 1 PB 5V, 2 SWD 5V, 3 PB EE 5V, 4 REC 12V, 5 SWD 12V, 6 REC EE 5V, 7 GND, 8 3Fsc

TO CP-2 CN153 — CN133: 1 GND, 2 PB C OUT, 3 REC 90H, 4 GND, 5 ACC IN, 6 GND, 7 ACC OUT

TO TB-1 CN856 — COMB F SW, REC EE 5V

TO CP-A CN257 — CN124: 1 RCA L-CH OUT, 2 GND, 3 RCA R-CH OUT, 4 S IN H

TO AD-2 CN213

TO TM-5 CN752 — CN129: 1 RCA L-CH IN, 2 GND, 3 RCA R-CH IN, 4 S IN H

TB-1 COMB FILTER ON OFF

CVBS OUT H
NORMAL H
SWD 9V
REC EE 5V
PB 5V

14 15 16 17 18 19 20 21 22 23 24 25 26 27 28 29

SIEMENS

**Ergänzung zu der Kundendienstschrift FM619Q4/K4**
**Supplement to the Service Manual FM619Q4/K4**
**Supplemento del Manuale di Servizio FM619Q4/K**

# VIDEORECORDER FM639Q4
# FM639N4

S-VHS 625 HQ VPS Hi-Fi-Stereo

## ELEKTRISCHER ABGLEICH

## ELECTRICAL ADJUSTMENT

Änderung vorbehalten
Subject to modification

Ausgabe 9012
Issue

Ident-Nr. 53 5311

Anmerkung:
Außer bei der MTS-Decoderschaltung (TN-3) und dem Digitalbaustein (DM-1, DM-3, DM-4) sind die Schaltungen und die grundsätzlichen Funktionen dieselben wie beim vorherigen Modell FM619Q4/K4. Daher wird in diesem Service Manual „Elektrischer Abgleich FM639Q4/N4" nur der Abgleich des MTS-Decoders behandelt. Es ist ratsam, dieses Service Manual „Elektrischer Abgleich FM639Q4/N4" zusammen mit den kostenlos erhältlichen „Service Manuals" zum FM619Q4/K4 zu verwenden.

## INHALTSVERZEICHNIS


Seite

**1. ANORDNUNG DER SCHALTPLATINEN**

1-1. SCHALTPLATINEN ..... 1 *
1-2. TESTPUNKTE ZUM EINSTELLEN DES BANDLAUFS ..... 1 *

**2. ELEKTRISCHER ABGLEICH**

2-1. VORBEREITUNGEN ..... 2 *
2-2. ABGLEICH DER SERVOSCHALTUNGEN ..... 2 *
2-3. ABGLEICH DER VIDEOSCHALTUNG ..... 5 *
2-4. ABLEICH DER DIGITALEN SIGNALVERARBEITUNG ..... entfällt
2-5. ABGLEICH DER AUDIOSCHALTUNG ..... 18 *
2-6. ABGLEICH DER AUSSTEUERUNGSANZEIGE ..... 20 *
2-7. ABGLEICH DER TUNER/ZF-BAUGRUPPE ..... 21 *
2-8. ABGLEICH DER MTS-DECODERSCHALTUNGEN ..... 1
2-9. ABGLEICH DER NICAM-DECODERSCHALTUNGEN ..... 22 *


* (siehe Elektrischer Abgleich FM619Q4/K4)

Note:
Excepting MTS Decoder PCB and Video Digital Process PCB, the circuit and basic operation for this modul (FM639Q4/N4) is the same that used for our previous model FM619Q4/K4. It is advisable to use the Service Manual together with the free materials on model FM619Q4/K4.

## CONTENTS


Page

**1. CIRCUIT BOARD LOCATIONS**

1-1. MAIN BOARDS ..... 1 *
1-2. TEXT POINT FOR TAPE PATH ADJUSTMENT ..... 1 *

**2. ELECTRICAL ADJUSTMENT**

2-1. PREPARATION ..... 2 *
2-2. SERVO CIRCUIT ADJUSTMENT ..... 2 *
2-3. VIDEO CIRCUIT ADJUSTMENT ..... 5 *
2-4. VIDEO DIGITAL PROCESSING CIRCUIT ADJUSTMENT ..... without
2-5. AUDIO CIRCUIT ADJUSTMENT ..... 18 *
2-6. LEVEL METER CIRCUIT ADJUSTMENT ..... 20 *
2-7. TUNER IF CIRCUIT ADJUSTMENT ..... 21 *
2-8. MTS DECODER CIRCUIT ADJUSTMENT ..... 1
2-9. NICAM DECODER CIRCUIT ADJUSTMENT ..... 22 *


* (look at Electrical Adj. FM619Q4/K4)

## 2-8. ABGLEICH DER MTS (MULITPLEX TV-SYSTEM)-DECODERSCHALTUNG.....TN-3 PCB

Anmerkung (1): VR631 ist von der Leiterbahnseite von CP-1 PCB zugänglich.

| Nr. | Abgleich | Eingang | Betriebsart | Meßpunkt | Abgleichpunkt | Anmerkung |
|---|---|---|---|---|---|---|
| 1 | KANAL TRENNUNG | Audio Signal (r...1kHZ 100% moduliert (l... 400Hz unmod.) aus MPX-Generator | EE | AUDIO-AUSGANG CN851 PIN 4 (Lch) (CP-1PCB) | VR631 | 1. Stellen Sie das Pilot-Signal auf Stereo ein. Während der linke Kanal unmoduliert ist, stellen Sie auf dem rechten Kanal eine 100%ige Modulation/1 kHZ ein.<br>2. Schließen Sie einen Oszillographen an den Audioausgang (linker Kanal) an. Stellen Sie mit VR631 eine minimale Signalamplitude ein. |
| 2 | STEREO (117,5 Hz) | TV-Sender Stereo | EE | IC631 Pin 5 | VR632 | 1. Wählen Sie einen Fernsehsender mit Stereosendung aus.<br>2. Stellen Sie mit VR632 eine maximale Signalamplitude ein. |
| 3 | 2-Ton (274,1 Hz) | TV-Sender (2-Ton) | EE | IC631 Pin 6 | VR633 | 1. Wählen Sie einen Fernsehsender mit 2 Ton-Sendung aus.<br>2. Stellen Sie mit VR633 eine maximale Signalamplitude ein. |

## 2-8. MTS (Multiplex TV System) DECODER CIRCUIT ADJUSTMENT.....TN-3 PCB

NOTE (1): The VR631 is accessible from the foil side of CP-1 PCB.

| No. | Item | Input | Mode | Point | Location | Remark |
|---|---|---|---|---|---|---|
| 1 | STEREO SEPARA-TION | Audio signal (R ch...1 KHz 100% mod. L ch...400Hz unmod.) from Audio MPX TV signal generator | E-E | AUDIO OUTPUT CN851 pin 4 (Lch) (CP-1 PCB) | VR631 | 1. Set the pilot signal for the stereo mode. With the L ch unmodulated, provide 1 KHz 100% modulation on the R ch.<br>2. Connect an oscilloscope to the audio output terminal (L ch) and adjust VR631 for minimum waveform peak-to peak value. |
| 2 | STEREO (117.5Hz) | TV broadcast (Stereo) | E-E | IC631 pin 5 | VR632 | 1. Select the TV channel to stereo programme.<br>2. Adjust VR632 so that the waveform is maximize. |
| 3 | BILINGUL (274.1Hz) | TV broadcast (Bilingul) | E-E | IC631 pin 6 | VR633 | 1. Select the TV channel to bilingul programme.<br>2. Adjust VR633 so that the waveform is maximize. |